Published: 11-May-2011

Automatic Transmission / Transaxle - V6 4.0L Petrol -

Lubricants

Item	Specification
* Recommended lubricant	ATF Shell M13754
+ Torque converter nose	Molybdenum disulphide grease to specification FB180

• CAUTIONS:

 * Do not use any lubricant other than that specified.

 + Do not over lubricate.

Capacity

Item	Capacity
+ Initial dry fill	9.5 litres (16.7 pints) (10.0 US qts)

CAUTION: + A final oil level check/top-up must be carried out when the unit has been installed.

General Specification

Item	Specification
Automatic transmission	ZF 6HP26
Speeds	6 Forward, 1 Reverse
Gear ratios:	
First	4.17:1
Second	2.340:1
Third	1.521:1
Fourth	1.143:1
Fifth	0.867:1
Sixth	0.691:1
Reverse	3.403:1
Torque converter	Sachs W260 2GWK with slip controlled, dual friction faced lock-up clutch
Transmission control module:	
Location	Located in gearbox casing
Type	1904

Torque Specifications

Description	Nm	lb-ft
Transmission heat shield bolts	10	7
Transmission heat shield bracket bolts	10	7
Fuel pipe heat shield bracket bolts	10	7
Selector cable bracket nut	12	9
Transmission control module Torx screws	8	6
Main control valve body Torx screws	8	6
Fluid pan Torx screws	8	6
Engine RH support nut	90	66
Transmission support insulator bolts	60	44
Selector shaft nut	12	9
Selector cable bracket bolts	10	7
Flexplate to torque converter bolts	45	33
Transmission bolts	45	33
Transmission breather pipe clip bolt	25	18
Transmission fluid lines clip bolt	10	7

transmissionmanuals.com

Published: 11-May-2011

Automatic Transmission / Transaxle - V6 4.0L Petrol - Automatic Transmission

Description and Operation

ZF 6HP26 Automatic Transmission Component Location

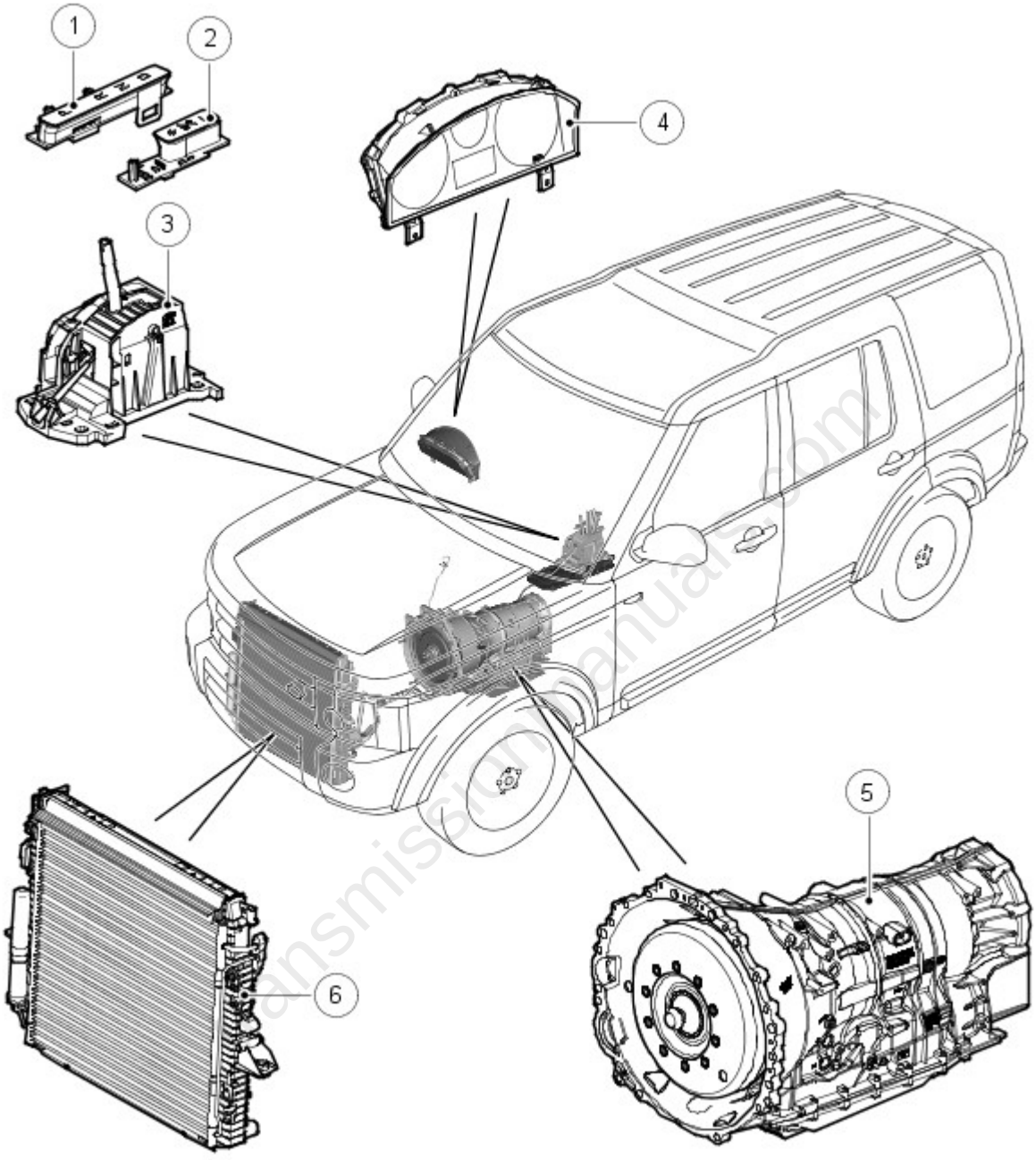

E42389

Item	Part Number	Description
1	-	PRND LCD display
2	-	M/S LCD display
3	-	Selector lever assembly
4	-	Instrument cluster
5	-	Automatic transmission
6	-	Transmission fluid cooler

GENERAL

The ZF 6HP26 transmission is an electronically controlled, six speed unit. The transmission is manufactured by ZF Transmissions GmbH in Saarbrücken, Germany. This transmission represents the latest in automatic transmission technology and incorporates new features to enhance the transmission functionality:

- The hydraulic and electronic control elements of the transmission are now incorporated in a single unit located inside the transmission and is known as 'Mechatronic'
- Another new strategy is Adaptive Shift Strategy (ASIS). ASIS represents the continuous adaptation of shift changes to suit the driving style of the driver which can vary from sporting to economical. Further details of the ASIS

function are contained in the 'Driving Modes' section.

The transmission is controlled by an Transmission Control Module (TCM) which contains software to provide operation as a semi-automatic 'CommandShift™' transmission. The TCM allows the transmission to be operated as a conventional automatic unit by selecting P, R, N, D on the selector lever. Movement of the selector lever across the gate to the 'M/S' position puts the transmission into electronic 'Sport' mode. Further movement of the lever in a lateral direction to the + or – position puts the transmission into electronic manual 'CommandShift™' mode.

The 6HP26 transmission has the following features:

- Designed to be maintenance free
- Transmission fluid is 'fill for life'
- The torque converter features a controlled slip feature with electronically regulated control of lock-up, creating a smooth transition to the fully locked condition
- Shift programs controlled by the TCM
- Connected to the ECM via the High Speed CAN for communications
- Default mode if major faults occur
- Diagnostics available from the TCM via the CAN.

ZF 6HP26 Automatic Transmission – Exploded View

• NOTE: The transmission shown is exploded to the extent of the serviceable items

transmissionmanuals.com

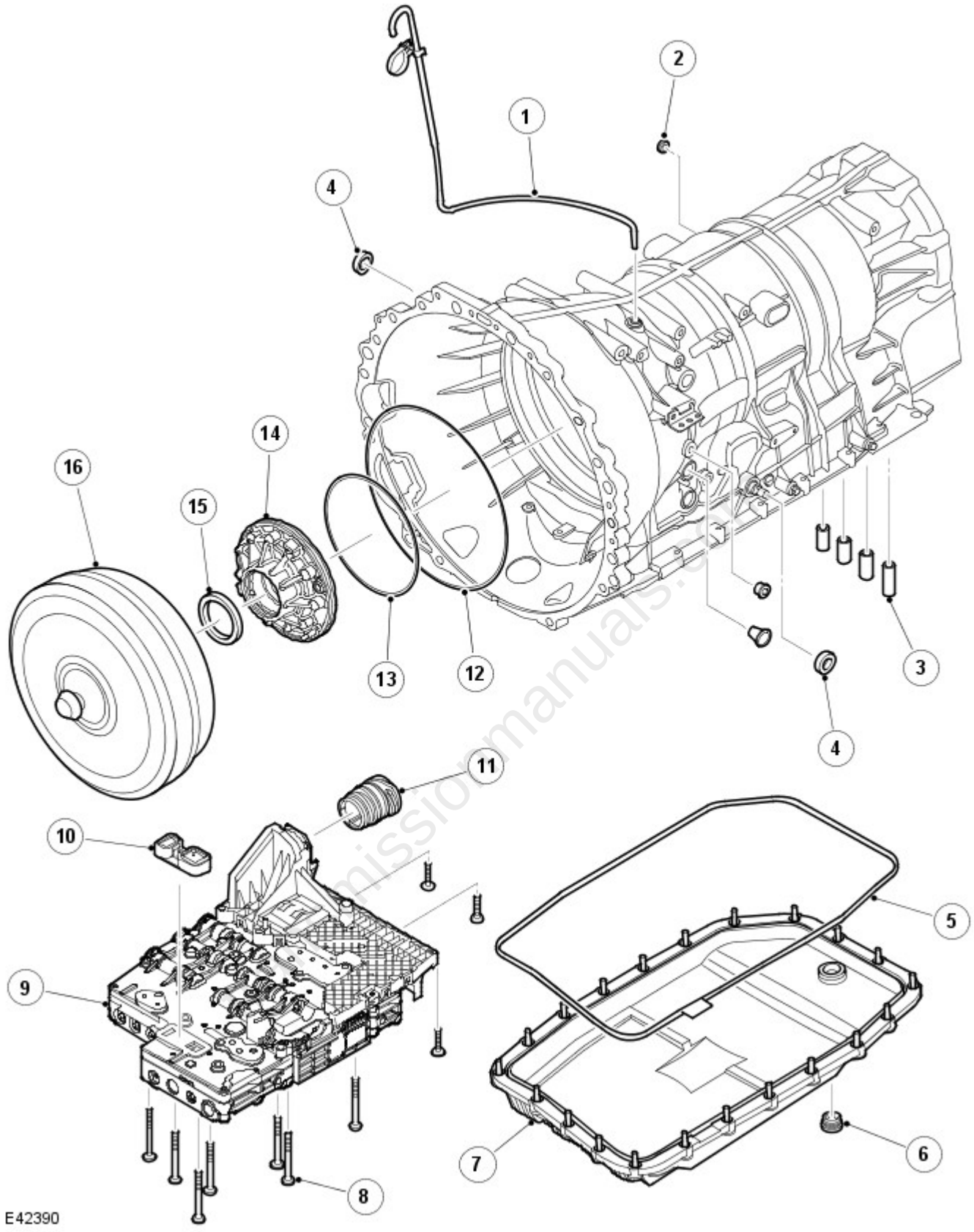

Item	Part Number	Description
1	-	Breather tube
2	-	Plug
3	-	Seal sleeves
4	-	Seal - Selector shaft (2 off)
5	-	Gasket
6	-	Drain plug
7	-	Fluid pan
8	-	Torx screws
9	-	Mechatronic valve block
10	-	Element seal
11	-	Electrical connector – guide sleeve

12	-	O-ring
13	-	O-ring
14	-	Pump housing (not a serviceable component)
15	-	Input shaft seal
16	-	Torque converter

The gearbox comprises the main casing which houses all of the transmission components. The main case also incorporates an integral bell housing.

A fluid pan is bolted to the lower face of the main case and is secured with bolts. The fluid pan is sealed to the main case with a gasket. Removal of the fluid pan allows access to the Mechatronic valve block. The fluid pan has a magnet located around the drain plug which collects any metallic particles present in the transmission fluid.

A fluid filter is located inside the fluid pan. If the transmission fluid becomes contaminated or after any service work, the fluid pan with integral filter must be replaced.

CAUTION: Take care when removing the fluid pan and/or replacing the Mechatronic valve block that neither the fluid pan gasket or the mating face on the transmission casing is damaged or leakage may occur. Do not use metal tools to prise the fluid pan from the transmission casing. Take care when positioning a new mechatronic unit to ensure it does not contact the casing face.

The integral bell housing provides protection for the torque converter assembly and also provides the attachment for the gearbox to the engine cylinder block. The torque converter is a non-serviceable assembly which also contains the lock-up clutch mechanism. The torque converter drives a crescent type pump via drive tangs. The fluid pump is located in the main case, behind the torque converter.

The main case contains the following major components:

- Input shaft
- Output shaft
- Mechatronic valve block which contains the solenoids, speed sensors and the TCM
- Three rotating multiplate drive clutches
- Two fixed multiplate brake clutches
- A single planetary gear train and a double planetary gear train.

ZF 6HP26 Automatic Transmission – Sectional View

transmissionmanuals.com

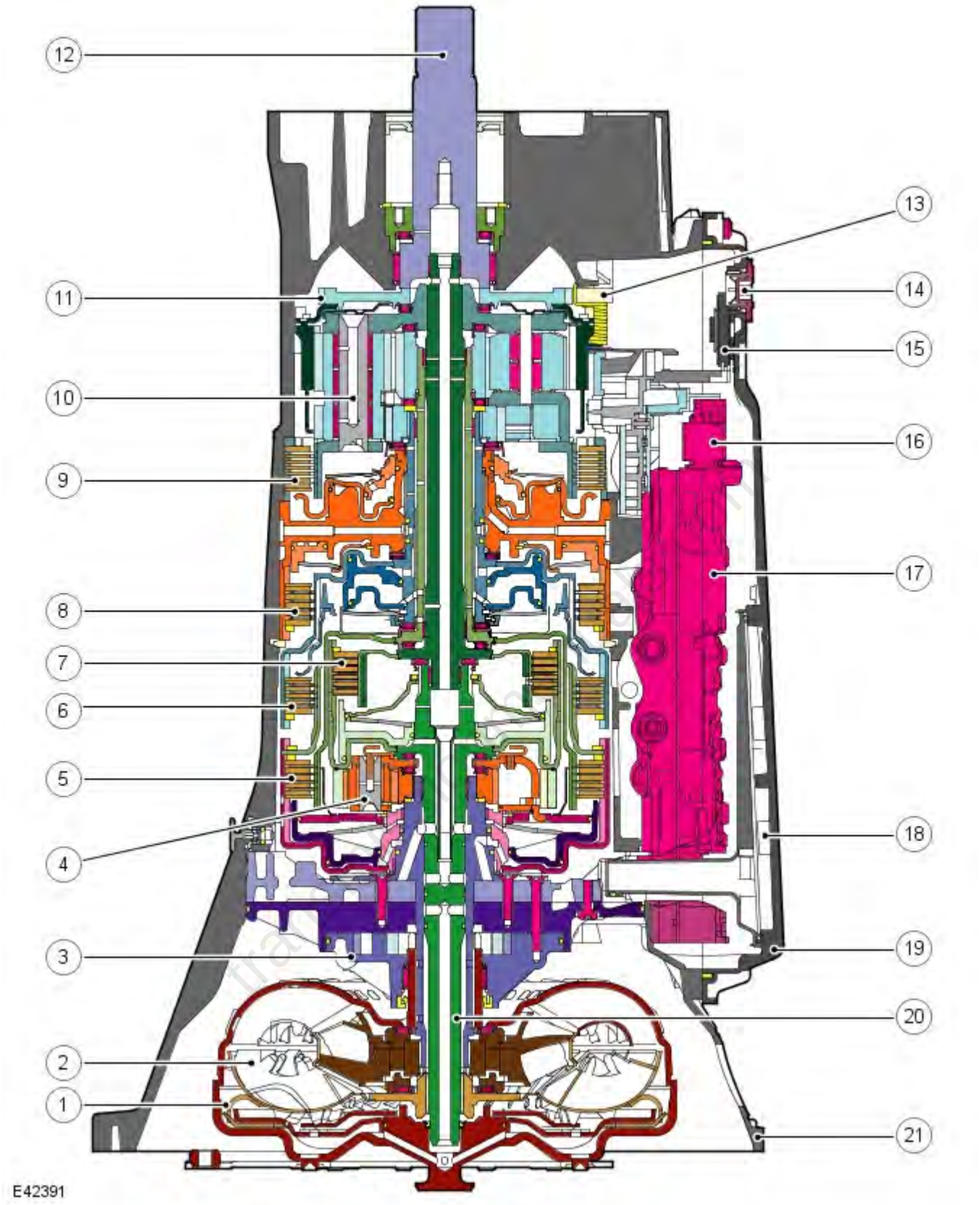

Item	Part Number	Description
1	-	Torque converter lock-up clutch
2	-	Torque converter
3	-	Fluid pump
4	-	Single planetary gearset
5	-	Clutch A
6	-	Clutch B
7	-	Clutch E
8	-	Brake C
9	-	Brake D
10	-	Double planetary gearset
11	-	Park lock gear

12	-	Output shaft
13	-	Park lock pawl
14	-	Drain plug
15	-	Magnet
16	-	Pressure regulator
17	-	Mechatronic valve block
18	-	Fluid filter
19	-	Fluid pan
20	-	Input shaft
21	-	Transmission casing

TORQUE CONVERTER

Torque Converter Components - 4.0L V6 and 4.4L V8 Models

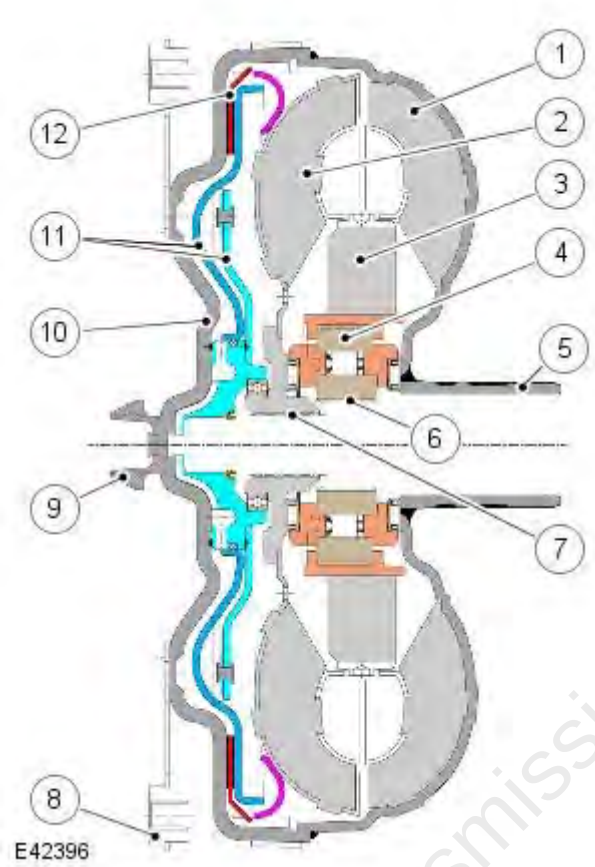

Item	Part Number	Description
1	-	Impeller
2	-	Turbine
3	-	Stator
4	-	Freewheel
5	-	Torque converter hub
6	-	Stator shaft
7	-	Turbine shaft
8	-	Drive plate
9	-	Journal - Drive plate location
10	-	Torque converter cover
11	-	Lock-up clutch piston
12	-	Lock-up clutch plate

Torque Converter Components - TdV6 Models

transmissionmanuals.com

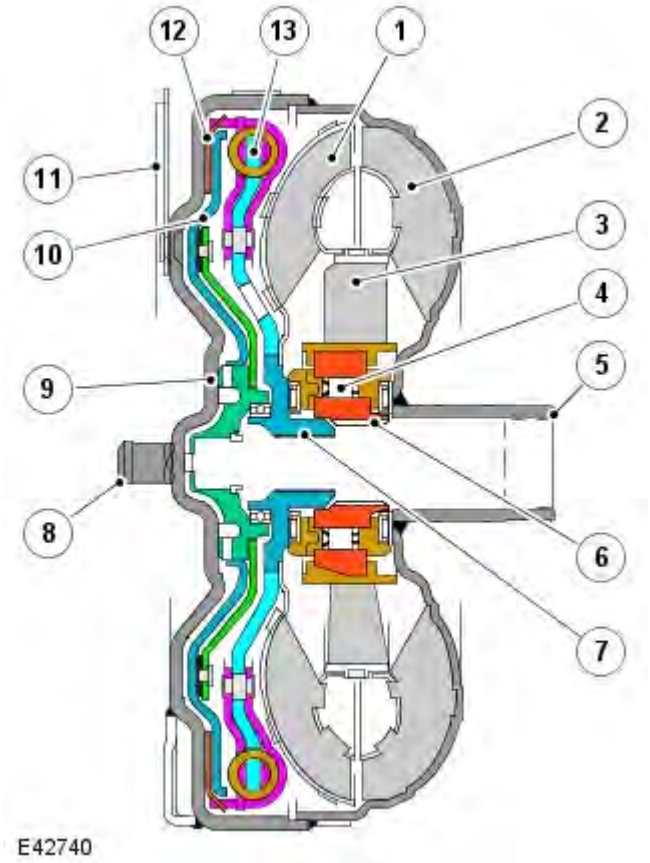

Item	Part Number	Description
1	-	Turbine
2	-	Impeller
3	-	Stator
4	-	Freewheel
5	-	Torque converter hub
6	-	Stator shaft
7	-	Turbine shaft
8	-	Journal - Drive plate location
9	-	Torque converter cover
10	-	Lock-up clutch piston
11	-	Drive plate
12	-	Lock-up clutch plate
13	-	Torsional vibration damper

The torque converter is the coupling element between the engine and the gearbox and is located in the transmission housing, on the engine side of the transmission. The driven power from the engine crankshaft is transmitted hydraulically and mechanically through the torque converter to the transmission. The torque converter is connected to the engine by a drive plate.

The torque converter comprises an impeller, a stator and a turbine. The torque converter is a sealed unit with all components located between the converter housing cover and the impeller. The two components are welded together to form a sealed, fluid filled housing. With the impeller welded to the converter housing cover, the impeller is therefore driven at engine crankshaft speed.

The converter housing cover has threaded bosses which provide for attachment of the engine drive plate which is connected to the engine crankshaft. The threaded bosses also provide for location of special tools which are required to remove the torque converter from the bell housing.

The torque converter used on TdV6 models is similar in construction to the torque converter on petrol models but contains a torsional vibration damper. The damper smooths the output from the engine and prevents unwanted vibration from being passed to the transmission.

Impeller

Fluid Flow

- NOTE: Typical torque converter shown

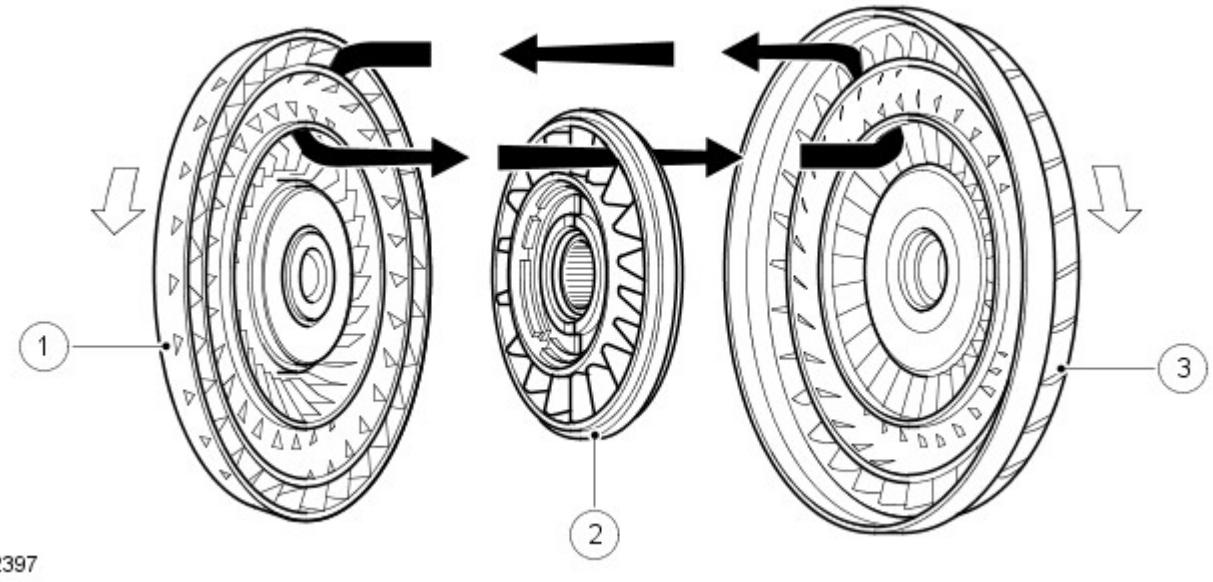

Item	Part Number	Description
1	-	Turbine
2	-	Stator
3	-	Impeller

When the engine is running the rotating impeller acts as a centrifugal pump, picking up fluid at its centre and discharging it at high velocity through the blades on its outer rim. The design and shape of the blades and the curve of the impeller body cause the fluid to rotate in a clockwise direction as it leaves the impeller. This rotation improves the efficiency of the fluid as it contacts the outer row of blades on the turbine.

The centrifugal force of the fluid leaving the blades of the impeller is passed to the curved inner surface of the turbine via the tip of the blades. The velocity and clockwise rotation of the fluid causes the turbine to rotate.

Turbine

The turbine is similar in design to the impeller with a continuous row of blades. Fluid from the impeller enters the turbine through the tip of the blades and is directed around the curved body of the turbine to the root of the blades. The curved surface redirects the fluid back in the opposite direction to which it entered the turbine, effectively increasing the turning force applied to the turbine from the impeller. This principle is known as torque multiplication.

When engine speed increases, turbine speed also increases. The fluid leaving the inner row of the turbine blades is rotated in an anti-clockwise direction due to the curve of the turbine and the shape of the blades. The fluid is now flowing in the opposite direction to the engine rotation and therefore the impeller. If the fluid was allowed to hit the impeller in this condition, it would have the effect of applying a brake to the impeller, eliminating the torque multiplication effect. To prevent this, the stator is located between the impeller and the turbine.

Stator

The stator is located on the splined transmission input shaft via a freewheel clutch. The stator comprises a number of blades which are aligned in an opposite direction to those of the impeller and turbine. The main function of the stator is to redirect the returning fluid from the turbine, changing its direction to that of the impeller.

The redirected fluid from the stator is directed at the inner row of blades of the impeller, assisting the engine in turning the impeller. This sequence increases the force of the fluid emitted from the impeller and thereby increases the torque multiplication effect of the torque converter.

Stator Functions

- NOTE: Typical stator shown

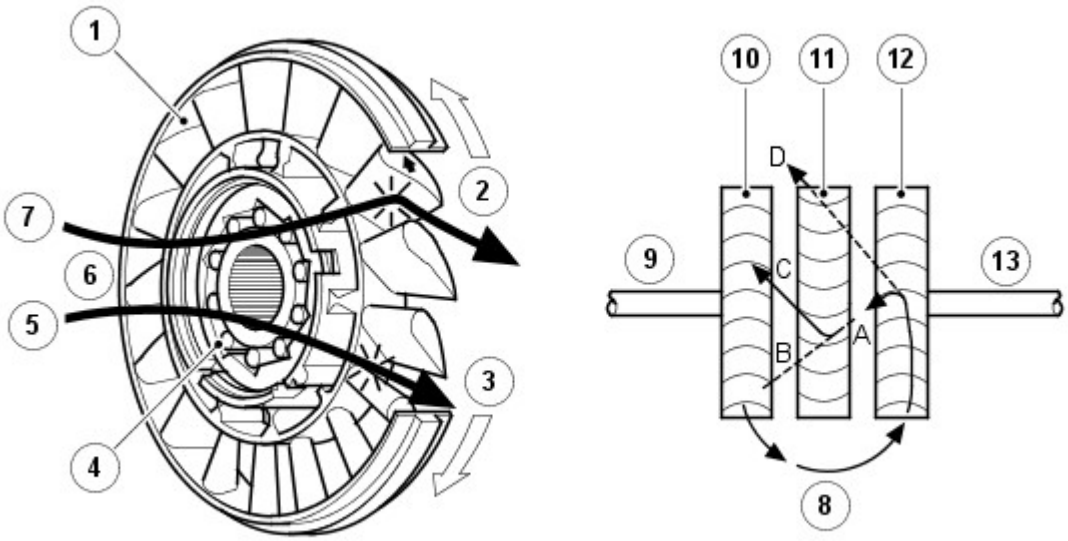

E 42398

Item	Part Number	Description
1	-	Blades
2	-	Stator held – fluid flow redirected
3	-	Stator rotates freely
4	-	Roller
5	-	Converter at coupling speed
6	-	Fluid flow from turbine
7	-	Converter multiplying
8	-	Fluid flow from impeller
9	-	Drive from engine
10	-	Impeller
11	-	Stator
12	-	Turbine
13	-	Output to transmission

Refer to the 'Stator Functions' illustration

Fluid emitted from the impeller acts on the turbine. If the turbine is rotating at a slower speed than the fluid from the impeller, the fluid will be deflected by the turbine blades in the path '**A**'. The fluid is directed at and deflected by the stator blades from path '**B**' to path '**C**'. This ensures that the fluid is directed back to the pump in the optimum direction. In this condition the sprag clutch is engaged and the force of the fluid on the stator blades assists the engine in rotating the impeller

As the rotational speed of the engine and therefore the turbine increases, the direction of the fluid leaving the turbine changes to path '**D**'. The fluid is now directed from the turbine to the opposite side of the stator blades, rotating the stator in the opposite direction. To prevent the stator from resisting the smooth flow of the fluid from the turbine, the sprag clutch releases, allowing the stator to rotate freely on its shaft.

When the stator becomes inactive, the torque converter no longer multiplies the engine torque. When the torque converter reaches this operational condition it ceases to multiply the engine torque and acts solely as a fluid coupling, with the impeller and the turbine rotating at approximately the same speed.

The stator uses a sprag type, one way, freewheel clutch. When the stator is rotated in a clockwise direction the sprags twist and are wedged between the inner and outer races. In this condition the sprags transfer the rotation of the outer race to the inner race which rotates at the same speed.

One Way Free Wheel Clutch – Typical

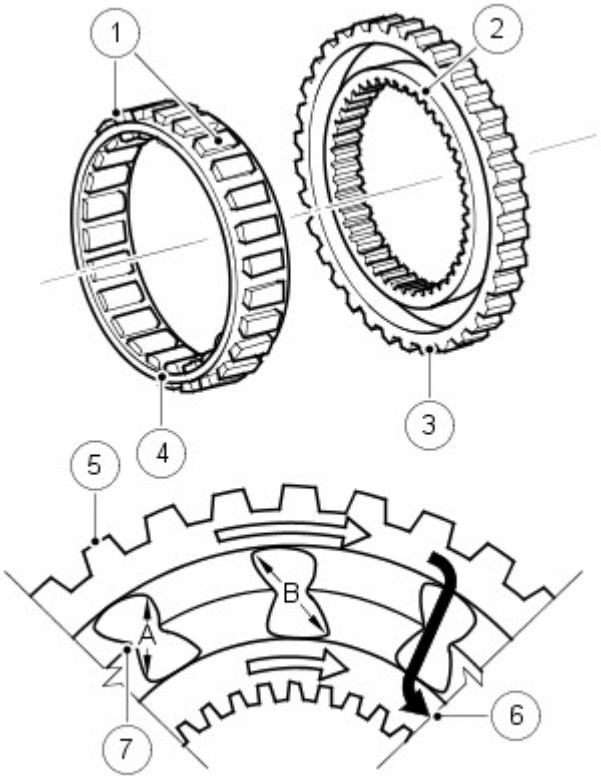

E42712

Item	Part Number	Description
1	-	Sprags
2	-	Inner race
3	-	Outer race
4	-	Sprag and cage assembly
5	-	Sprag outer race
6	-	Sprag inner race
7	-	Retaining ring

The free wheel clutch can perform three functions; hold the stator stationary, drive the stator and free wheel allowing the stator to rotate without a drive output. The free wheel clutch used in the 6HP26 transmission is of the sprag type and comprises an inner and outer race and a sprag and cage assembly. The inner and outer races are pressed into their related components with which they rotate. The sprag and cage assembly is located between the inner and outer races.

The sprags are located in a cage which is a spring which holds the sprags in the 'wedge' direction and maintains them in contact with the inner and outer races.

Referring to the illustration, the sprags are designed so that the dimension 'B' is larger than the distance between the inner and outer race bearing surfaces. When the outer race rotates in a clockwise direction, the sprags twist and the edges across the dimension 'B' wedge between the races, providing a positive drive through each sprag to the inner race. The dimension 'A' is smaller than the distance between the inner and outer race bearing surfaces. When the outer race rotates in an anti-clockwise direction, the dimension 'A' is too small to allow the sprags to wedge between the races, allowing the outer race to rotate freely.

On the illustration shown, when the outer race is rotated in a clockwise direction, the sprags twist and are 'wedged' between the inner and outer races. The sprags then transfer the rotation of the outer race to the inner race, which rotates at the same speed.

Lock-Up Clutch Mechanism

The Torque Converter Clutch (TCC) is hydraulically controlled by an electronic pressure regulating solenoid (EPRS6) which is controlled by the TCM. This allows the torque converter to have three states of operation as follows:

- Fully engaged
- Controlled slip variable engagement
- Fully disengaged

The TCC is controlled by two hydraulic spool valves located in the valve block. These valves are actuated by pilot pressure supplied via a solenoid valve which is also located in the valve block. The solenoid valve is operated by PWM signals from the TCM to give full, partial or no lock-up of the torque converter.

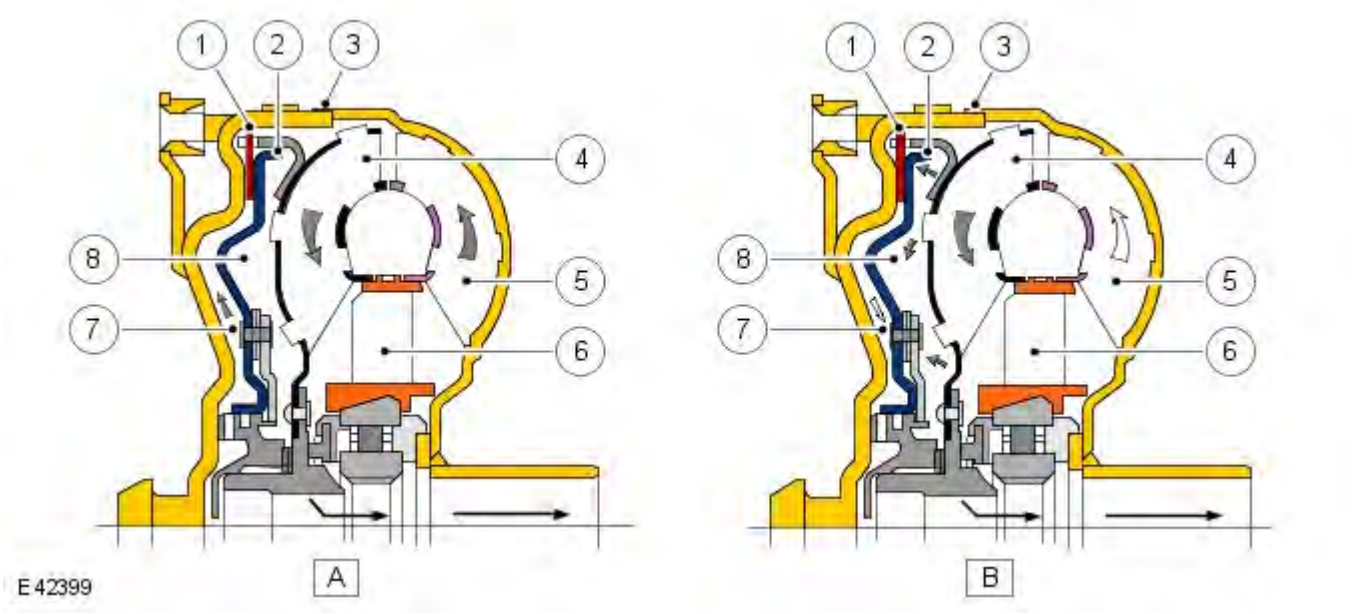

Item	Part Number	Description
A	-	Unlocked condition
B	-	Locked condition
1	-	Clutch plate
2	-	Clutch piston
3	-	Torque converter body
4	-	Turbine
5	-	Impeller
6	-	Stator
7	-	Piston chamber
8	-	Turbine chamber

The lock-up clutch is a hydro-mechanical device which eliminates torque converter slip, improving fuel consumption. The engagement and disengagement is controlled by the TCM to allow a certain amount of controlled 'slip'. This allows a small difference in the rotational speeds of the impeller and the turbine which results in improved shift quality. The lock-up clutch comprises a piston and a clutch friction plate.

In the unlocked condition, the oil pressure supplied to the piston chamber and the turbine chamber is equal. Pressurised fluid flows through a drilling in the turbine shaft and through the piston chamber to the turbine chamber. In this condition the clutch plate is held away from the torque converter body and torque converter slip is permitted.

In the locked condition, the TCC spool valves are actuated by the electronic pressure regulating solenoid (EPRS6). The fluid flow in the unlocked condition is reversed and the piston chamber is vented. Pressurised fluid is directed into the turbine chamber and is applied to the clutch piston. The piston moves with the pressure and pushes the clutch plate against the torque converter body. As the pressure increases, the friction between the clutch plate and the body increases, finally resulting in full lock-up of the clutch plate with the body. In this condition there is direct mechanical drive from the engine crankshaft to the transmission planetary gear train.

FLUID PUMP

The fluid pump is an integral part of the transmission. The fluid pump is used to supply hydraulic pressure for the operation of the control valves and clutches and also to pass the fluid through the transmission cooler.

The 6HP26 fluid pump is a crescent type pump and is located between the intermediate plate and the torque converter. The pump has a delivery rate of 16cm^3 per revolution.

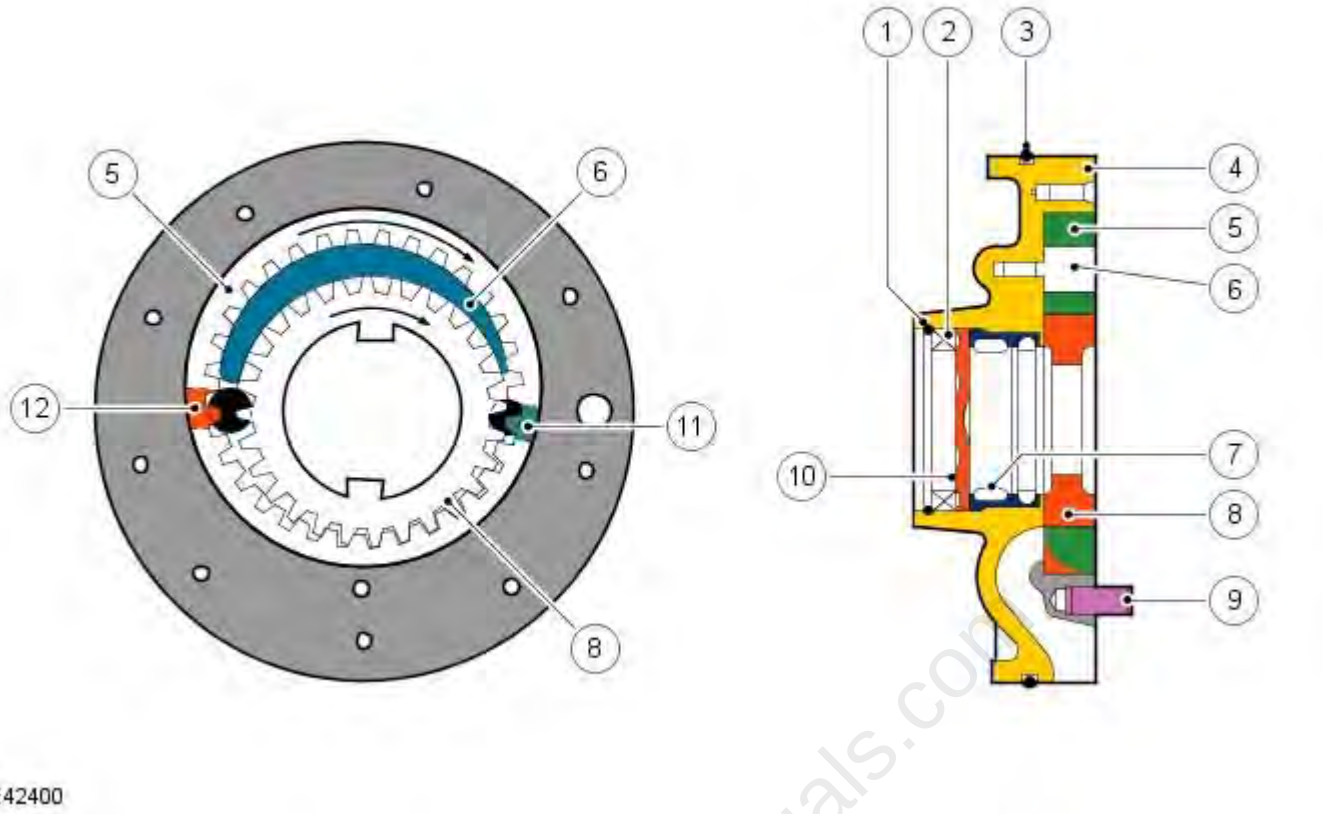

E42400

Item	Part Number	Description
1	-	Securing ring
2	-	Shaft oil seal
3	-	O-ring seal
4	-	Pump housing
5	-	Ring gear
6	-	Crescent spacer
7	-	Roller bearing
8	-	Impeller
9	-	Centring pin
10	-	Spring washer
11	-	Outlet port (high pressure)
12	-	Inlet port (low pressure)

The pump comprises a housing, a crescent spacer, an impeller and a ring gear. The housing has inlet and outlet ports to direct flow and is located in the intermediate plate by a centring pin. The pump action is achieved by the impeller, ring gear and crescent spacer.

The crescent spacer is fixed in its position by a pin and is located between the ring gear and the impeller. The impeller is driven by drive from the torque converter which is located on a needle roller bearing in the pump housing. The impeller teeth mesh with those of the ring gear. When the impeller is rotated, the motion is transferred to the ring gear which rotates in the same direction.

The rotational motion of the ring gear and the impeller collects fluid from the intake port in the spaces between the teeth. When the teeth reach the crescent spacer, the oil is trapped in the spaces between the teeth and is carried with the rotation of the gears. The spacer tapers near the outlet port. This reduces the space between the gear teeth causing a build up of fluid pressure as the oil reaches the outlet port. When the teeth pass the end of the spacer the pressurised fluid is passed to the outlet port.

The fluid emerging from the outlet port is passed through the fluid pressure control valve. At high operating speeds the pressure control valve maintains the output pressure to the gearbox at a predetermined maximum level. Excess fluid is relieved from the pressure control valve and is directed, via the main pressure valve in the valve block, back to the pump inlet port. This provides a pressurised feed to the pump inlet which prevents cavitation and reduces pump noise.

MECHATRONIC VALVE BLOCK

The Mechatronic valve block is located in the bottom of the transmission and is covered by the fluid pan. The valve block houses the TCM, electrical actuators, speed sensors and control valves which provide all electro-hydraulic control for all transmission functions. The Mechatronic valve block comprises the following components:

- TCM
- Six pressure regulator solenoids
- One shift control solenoid
- One damper
- Twenty one hydraulic spool valves
- Manually operated selector valve
- Temperature sensor

- Turbine speed sensor
- Output shaft speed sensor.

A radio interference suppressor is located on a bracket on the right hand side of the transmission, forward of the selector shaft lever. The suppressor is connected into the transmission wiring harness and prevents solenoid operating noise affecting the audio system.

ZF 6HP26 Automatic Transmission – Mechatronic Valve Block

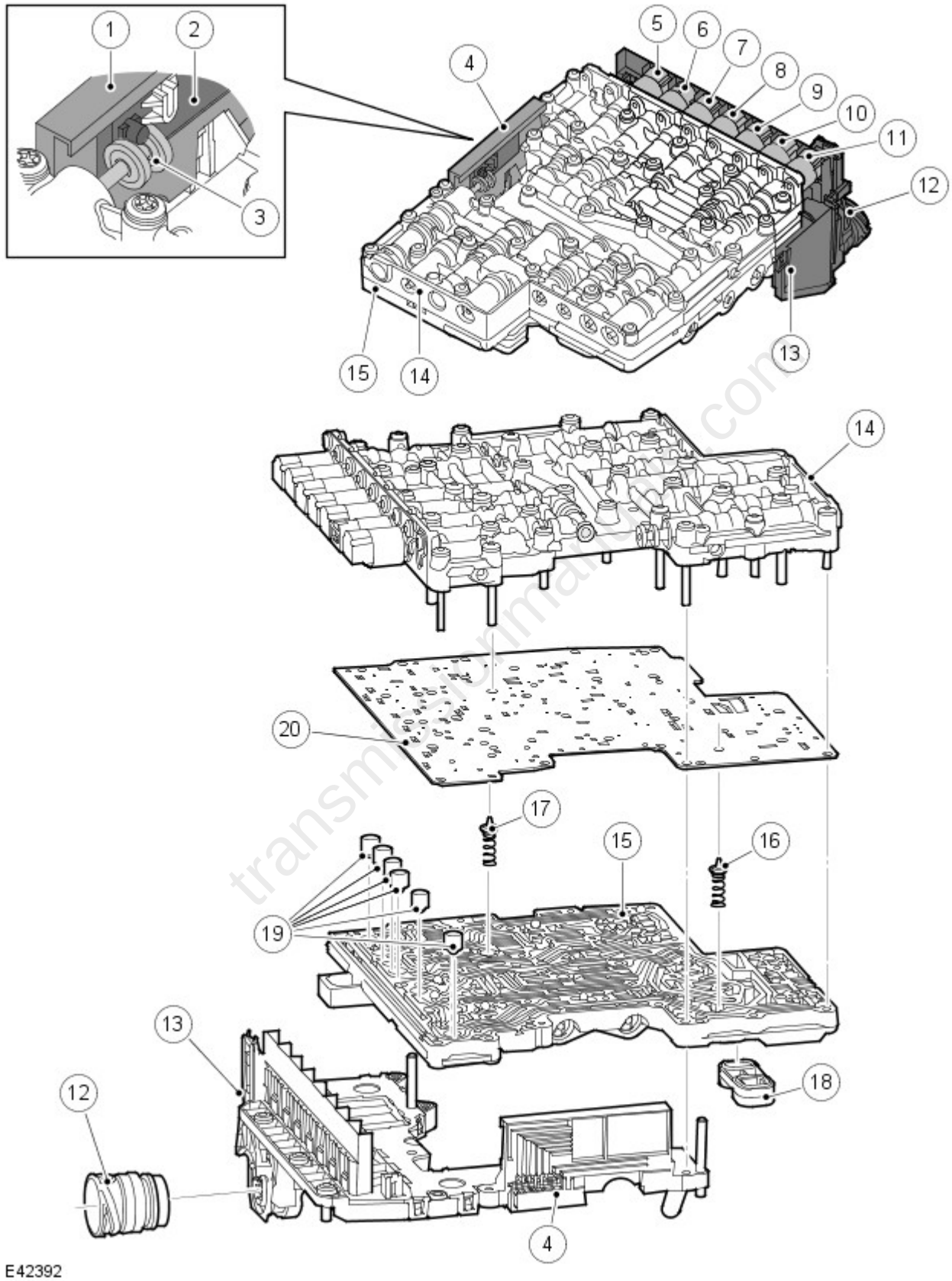

Item	Part Number	Description
1	-	Position switch
2	-	Sliding block
3	-	Selector spool valve

4	-	Position switch assembly
5	-	Electronic Pressure Regulator Solenoid (EPRS) 6
6	-	Solenoid Valve 1
7	-	EPRS 4
8	-	EPRS 5
9	-	EPRS 3
10	-	EPRS 2
11	-	EPRS 1
12	-	Electrical connector
13	-	Transmission Control Module (TCM)
14	-	Valve housing
15	-	Valve plate
16	-	Torque converter retaining valve
17	-	Clutch return valve
18	-	Element seal
19	-	Pressure regulator dampers
20	-	Intermediate plate

ZF 6HP26 Automatic Transmission – Valve Housing Components

transmissionmanuals.com

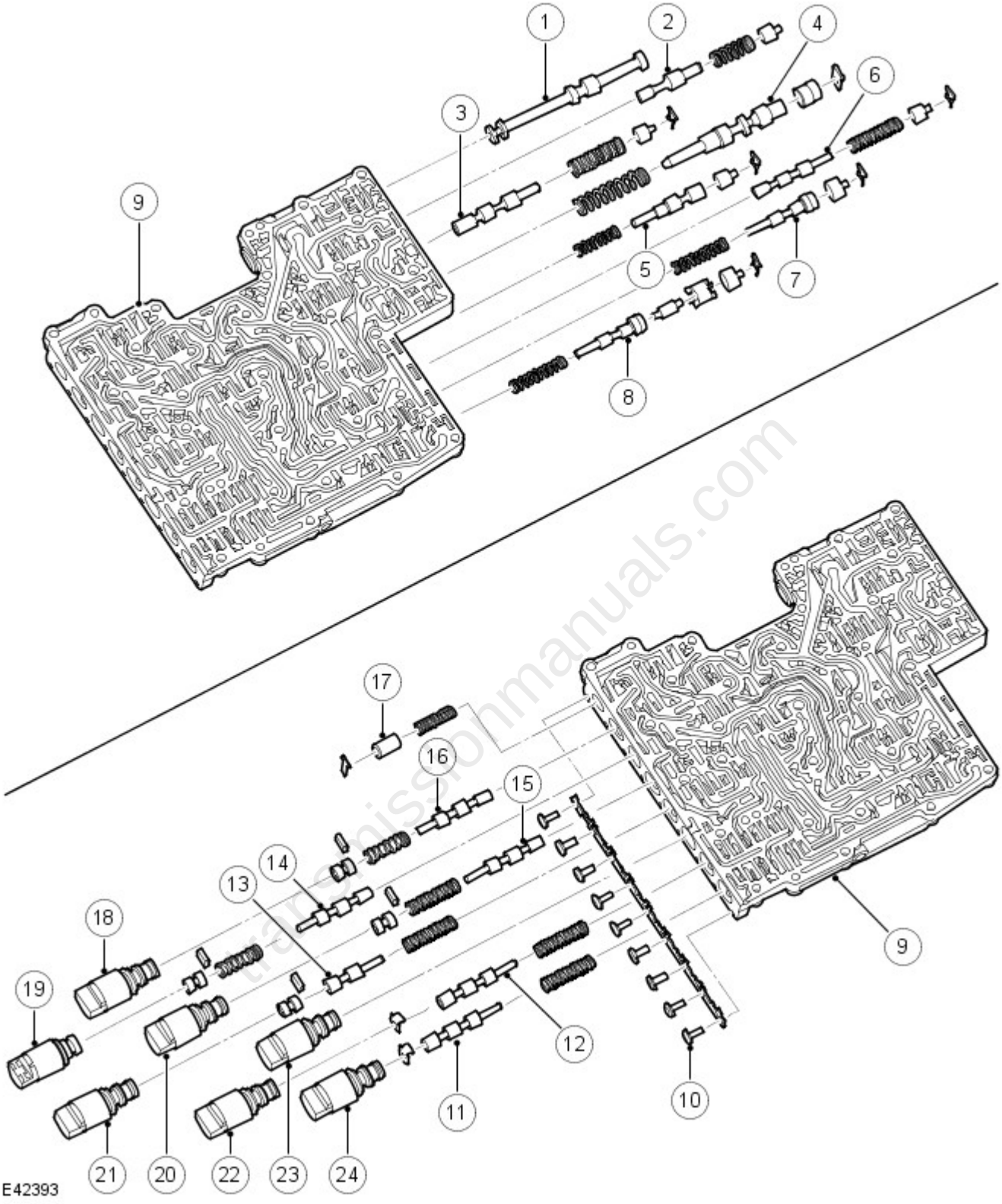

transmissionmanuals.com

Item	Part Number	Description
1	-	Selector spool valve
2	-	Lubricating valve
3	-	Torque converter pressure valve
4	-	System pressure valve
5	-	Torque converter clutch valve
6	-	Retaining valve – Clutch E
7	-	Clutch valve E
8	-	Clutch valve A
9	-	Valve housing
10	-	Bolts
11	-	Retaining valve – Clutch A

12	-	Retaining valve – Clutch B
13	-	Pressure reducing valve
14	-	Shift valve 1
15	-	Retaining valve – Brake D
16	-	Shift valve 2
17	-	Damper
18	-	Electronic Pressure Regulator Solenoid (EPRS) 6
19	-	Solenoid valve 1
20	-	EPRS 4
21	-	EPRS 5
22	-	EPRS 2
23	-	EPRS 3
24	-	EPRS 1

ZF 6HP26 Automatic Transmission – Valve Plate Components

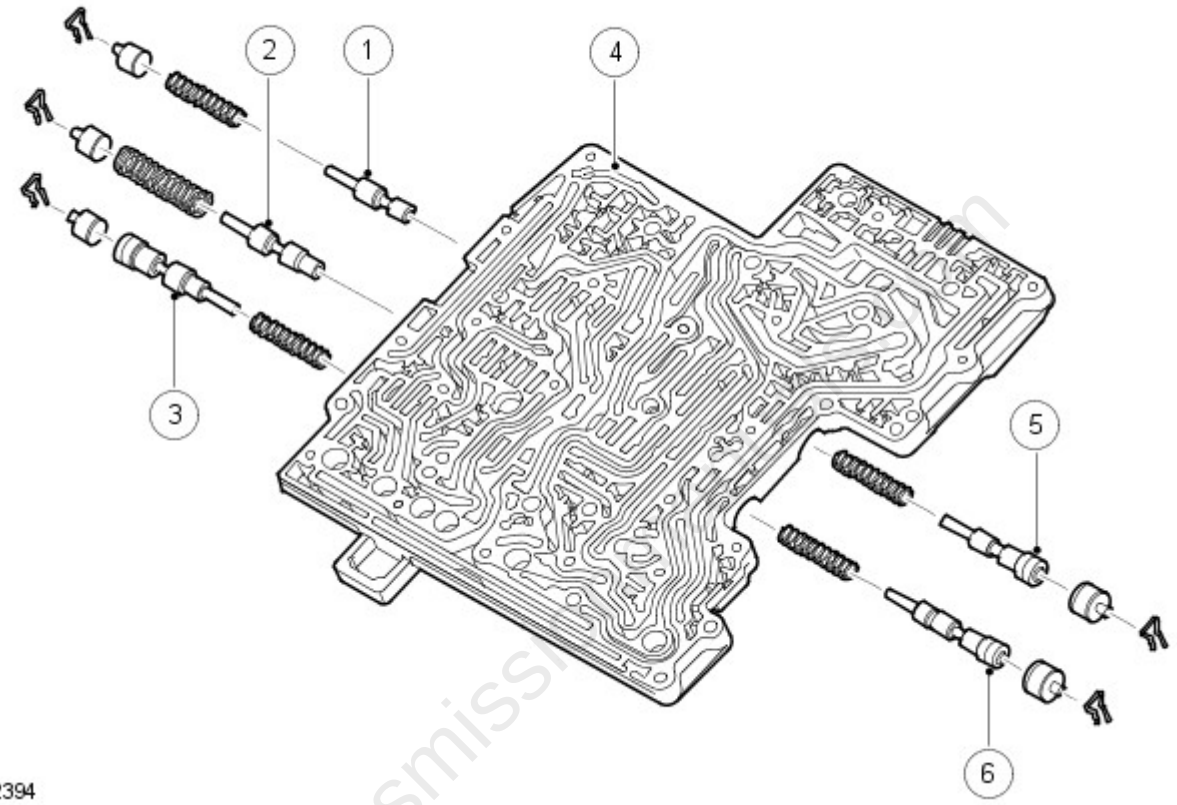

Item	Part Number	Description
1	-	Retaining valve – Brake D2
2	-	Clutch valve – Brake D2
3	-	Clutch valve B
4	-	Valve plate
5	-	Clutch valve – Brake D1
6	-	Clutch valve – Brake C

Electronic Pressure Regulator Solenoids (EPRS)

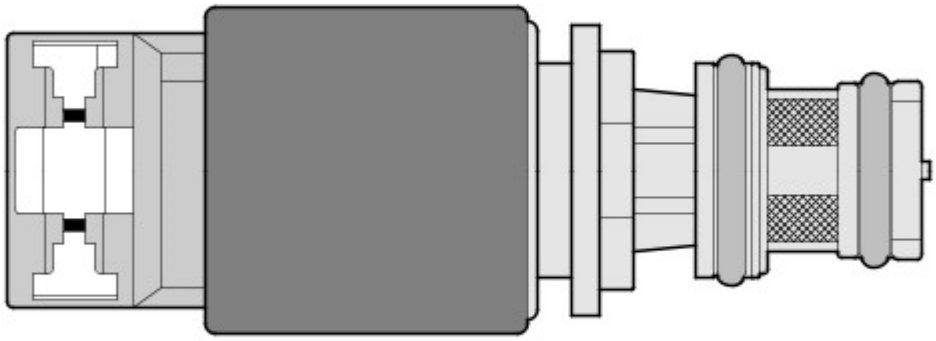

E42713

Six Electronic Pressure Regulator Solenoids (EPRS) are located in the valve block. The solenoids are controlled by Pulse width Modulation (PWM) signals from the TCM. The solenoids convert the electrical signals into hydraulic control pressure proportional to the signal to actuate the spool valves for precise transmission operation.

The following table shows EPRS and their associated functions:

EPRS	Function
1	Clutch A
2	Clutch B
3	Clutch C
4	Brake clutches D and E
5	System pressure control
6	Torque converter lock-up control

Solenoids EPRS 1, 3 and 6 supply a lower control pressure as the signal amperage increases and can be identified by a black connector cap. The TCM operates the solenoids using PWM signals. The TCM monitors engine load and clutch slip and varies the solenoid duty cycle accordingly. The solenoids have a 12V operating voltage and a pressure range of 0 - 4.6 bar (0 - 67 lbf.in^2).

Solenoids EPRS 2, 4 and 5 supply a higher control pressure as the signal amperage increases and can be identified by a green connector cap. The solenoids are normally open, regulating flow solenoid valves. The TCM operates the solenoids using a PWM earth proportional to the required increasing or decreasing clutch pressures. The solenoids have a 12V operating voltage and a pressure range of 4.6 - 0 bar (67 - 0 lbf.in^2).

The resistance of the coil winding for the EPRS solenoids is 5.05 ohms at 20°C (68°F).

Control Solenoid

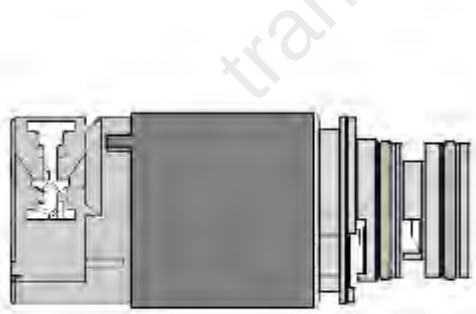

E42714

A shift control Solenoid Valve (SV) is located in the valve block. The solenoid is controlled by the TCM and converts electrical signals into hydraulic control signals to control clutch application.

The shift control solenoid is an open/closed, on/off solenoid which is controlled by the TCM switching the solenoid to earth. The TCM also supplies power to the solenoid. The TCM energises the solenoid in a programmed sequence for clutch application for gear ratio changes and shift control.

The resistance of the solenoid coil winding for solenoid is between 26 to 30.4 ohms at 20°C (68°F).

Sensors

Speed Sensors

transmissionmanuals.com

The turbine speed sensor and the output shaft speed sensor are Hall effect type sensors located in the Mechatronic valve block and are not serviceable items. The TCM monitors the signals from each sensor to determine the input (turbine) speed and the output shaft speed.

The turbine speed is monitored by the TCM to calculate the slip of the torque converter clutch and internal clutch slip. This signal allows the TCM to accurately control the slip timing during shifts and adjust clutch application or release pressure for overlap shift control.

The output shaft speed is monitored by the TCM and compared to engine speed signals received on the CAN bus from the ECM. Using a comparison of the two signals the TCM calculates the transmission slip ratio for plausibility and maintains adaptive pressure control.

Temperature Sensor

The temperature sensor is also located in the Mechatronic valve block. The TCM uses the temperature sensor signals to determine the temperature of the transmission fluid. These signals are used by the TCM to control the transmission operation to promote faster warm-up in cold conditions or to assist with fluid cooling by controlling the transmission operation when high fluid temperatures are experienced. If the sensor fails, the TCM will use a default value and a fault code will be stored in the TCM.

Damper

There is one damper located in the valve housing. The damper is used to regulate and dampen the regulated pressure supplied via EPRS 5. The damper is load dependent through modulation of the damper against return spring pressure.

The damper comprises a piston, a housing bore and a spring. The piston is subject to the pressure applied by the spring. The bore has a connecting port to the function to which it applies. Fluid pressure applied to the applicable component (i.e. a clutch) is also subjected to the full area of the piston, which moves against the opposing force applied by the spring. The movement of the piston creates an action similar to a shock absorber, momentarily delaying the build up of pressure in the circuit. This results in a more gradual application of clutches improving shift quality.

Spool Valves

The valve block contains twenty one spool valves which control various functions of the transmission. The spool valves are of conventional design and are operated by fluid pressure.

Each spool valve is located in its spool bore and held in a default (unpressurised) position by a spring. The spool bore has a number of ports which allow fluid to flow to other valves and clutches to enable transmission operation. Each spool has a piston which is waisted to allow fluid to be diverted into the applicable ports when the valve is operated.

When fluid pressure moves a spool, one or more ports in the spool bore are covered or uncovered. Fluid is prevented from flowing or is allowed to flow around the applicable waisted area of the spool and into another uncovered port. The fluid is either passed through galleries to actuate another spool, operate a clutch or is returned to the fluid pan.

DRIVE CLUTCHES

Multiplate Drive or Brake Clutch – Typical

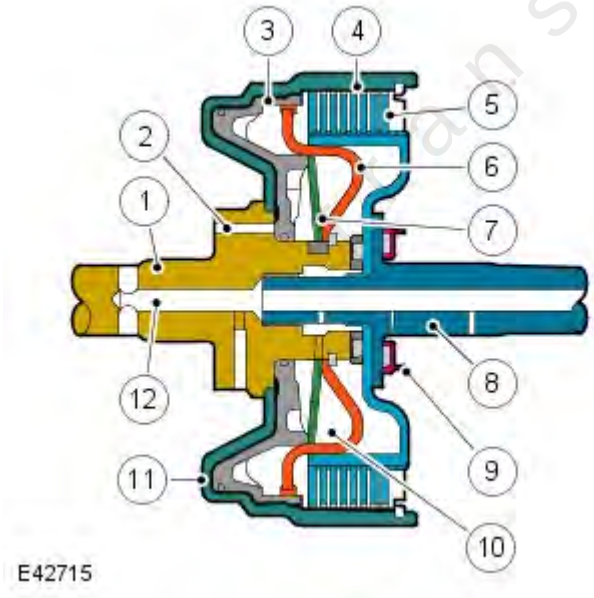

Item	Part Number	Description
1	-	Input shaft
2	-	Main pressure supply port
3	-	Piston
4	-	Cylinder – External plate carrier
5	-	Clutch plate assembly
6	-	Baffle plate
7	-	Diaphragm spring
8	-	Output shaft
9	-	Bearing

10	-	Dynamic pressure equalisation chamber
11	-	Piston chamber
12	-	Lubrication channel

There are three drive clutches and two brake clutches used in the 6HP26 transmission. Each clutch comprises one or more friction plates dependent on the output controlled. A typical clutch consists of a number of steel outer plates and inner plates with friction material bonded to each face.

The clutch plates are held apart mechanically by a diaphragm spring and hydraulically by dynamic pressure. The pressure is derived from a lubrication channel which supplies fluid to the bearings etc. The fluid is passed via a drilling in the output shaft into the chamber between the baffle plate and the piston. To prevent inadvertent clutch application due to pressure build up produced by centrifugal force, the fluid in the dynamic pressure equalisation chamber overcomes any pressure in the piston chamber and holds the piston off the clutch plate assembly.

When clutch application is required, main pressure from the fluid pump is applied to the piston chamber from the supply port. This main pressure overcomes the low pressure fluid present in the dynamic pressure equalisation chamber. The piston moves, against the pressure applied by the diaphragm spring, and compresses the clutch plate assembly. When the main pressure falls, the diaphragm spring pushes the piston away from the clutch plate assembly, disengaging the clutch.

PLANETARY GEAR TRAINS

The planetary gear trains used on the 6HP26 transmission comprise a single web planetary gear train and a double web planetary gear train. These gear trains are known as Lepelletier type gear trains and together produce the six forward gears and the one reverse gear.

Single Web Planetary Gear Train

The single web planetary gear train comprises:

- One sunwheel
- Three planetary gears
- One planetary gear carrier
- One ring gear or annulus

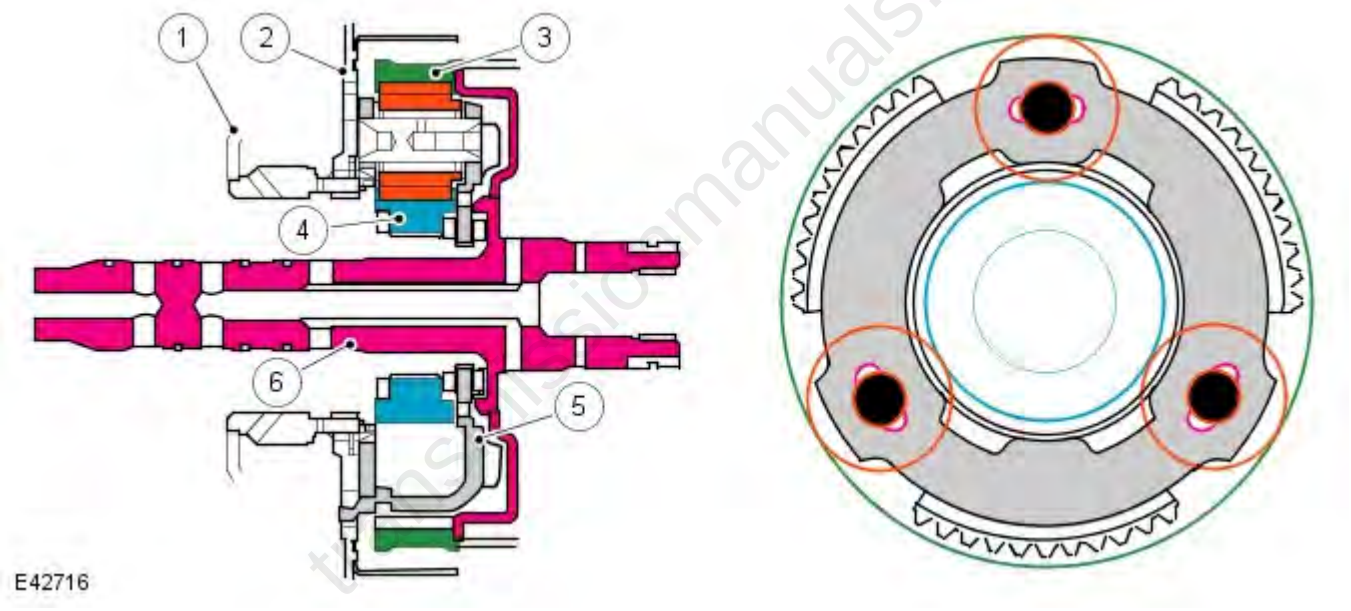

Item	Part Number	Description
1	-	Cylinder
2	-	Baffle plate
3	-	Ring gear
4	-	Planetary gear carrier
5	-	Planetary gear spider
6	-	Torque converter input shaft

Double Web Planetary Gear Train

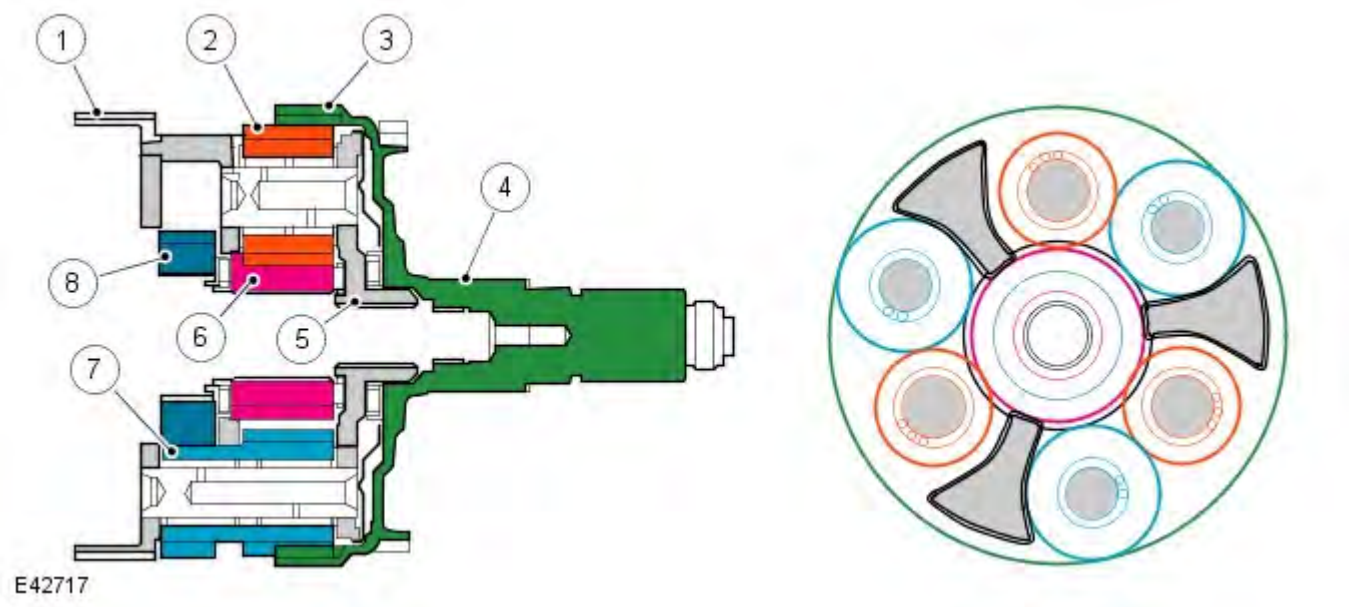

Item	Part Number	Description
1	-	Planetary gear spider
2	-	Planetary gears (short)
3	-	Ring gear
4	-	Output shaft
5	-	Planetary gear
6	-	Sunwheel
7	-	Double planetary gears (long)
8	-	Sunwheel

The double planetary gear train comprises:

- Two sunwheels
- Three short planetary gears
- Three long planetary gears
- One planetary gear carrier
- One ring gear or annulus

POWER FLOWS

Operation of the transmission is controlled by the TCM which electrically activates various solenoids to control the transmission gear selection. The sequence of solenoid activation is based on programmed information in the module memory and physical transmission operating conditions such as vehicle speed, throttle position, engine load and selector lever position.

Powerflow Schematic

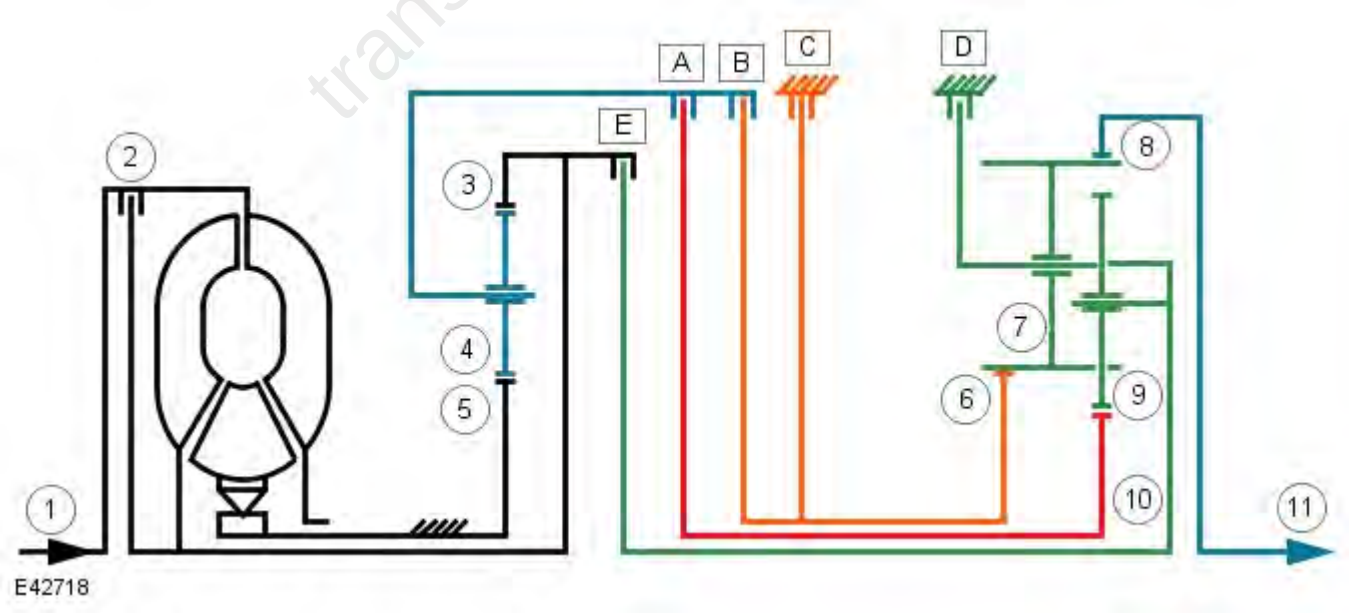

Item	Part Number	Description
1	-	Torque input from engine
2	-	Torque converter lock-up clutch
3	-	Single web planetary gear carrier

transmissionmanuals.com

4	-	Single web planetary gears
5	-	Single web sunwheel 1
6	-	Double web sunwheel 2
7	-	Double web planetary gears - Long
8	-	Double web planetary gear carrier
9	-	Double web planetary gears - Short
10	-	Double web sunwheel 3
11	-	Torque output from transmission
A	-	Multiplate clutch
B	-	Multiplate clutch
C	-	Multiplate brake
D	-	Multiplate brake
E	-	Multiplate clutch

Engine torque is transferred, via operation of single or combinations of clutches to the two planetary gear trains. Both gear trains are controlled by reactionary inputs from brake clutches to produce the six forward gears and one reverse gear. The ratios are as follows:

Gear	1st	2nd	3rd	4th	5th	6th	Reverse
Ratio	4.171	2.340	1.521	1.143	0.867	0.691	3.403

The following table shows which solenoids are activated to produce the required torque output from the transmission.

Gear Selector Lever Position	Shift Control Solenoid Valve	Electronic Pressure Regulator Solenoids (EPRS)					
		1	2	3	4	5	6
P					ON	-ON-	
R			ON		ON	-ON-	
N					ON	-ON-	
D 1		ON			ON	-ON-	-ON-
D 2		ON		ON		-ON-	-ON-
D 3		ON	ON			-ON-	-ON-
D 4	ON	ON			ON	-ON-	-ON-
D 5	ON		ON		ON	-ON-	-ON-
D 6	ON			ON	ON	-ON-	-ON-

ON = Active (pressure build up)
OFF = Inactive
-ON- = Inactive (pressure drain)

The following table shows which clutches are operating for selected gear ratios to produce the required torque output from the transmission.

Gear Selector Lever Position	Shift Control Solenoid Valve	Clutch				Brake	
		A	B	E	WK	C	D
P							X
R			X				X
N							X
D 1		X			X		X
D 2		X			X	X	
D 3		X	X		X		
D 4	ON	X		X	X		
D 5	ON		X	X	X		
D 6	ON			X	X	X	

X = clutch applied

Shift Elements

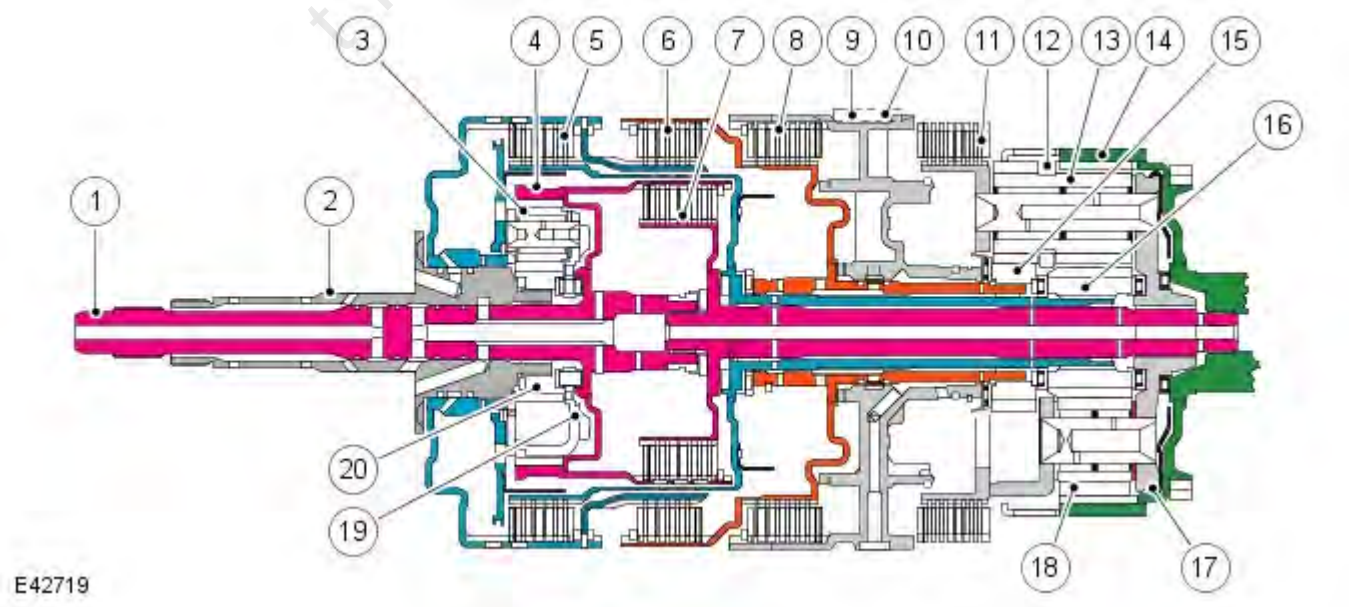

Item	Part Number	Description
1	-	Turbine shaft

2	-	Stator shaft
3	-	Single web planetary gear train
4	-	Ring gear 1
5	-	Clutch A
6	-	Clutch B
7	-	Clutch E
8	-	Brake clutch C
9	-	Fixed connection to transmission housing
10	-	Shaft key
11	-	Brake clutch D
12	-	Double web planetary gear train
13	-	Planetary gears - Long
14	-	Ring gear 2
15	-	Sunwheel 2
16	-	Sunwheel 3
17	-	Double web planetary gear carrier
18	-	Planetary gears - short
19	-	Single web planetary gear carrier
20	-	Sunwheel 1

The shift elements are three rotating multiplate clutches (A, B and E) and two fixed multiplate brakes © and D). All shifts from 1st to 6th gears are power-on overlapping shifts. Overlapping shifts can be described as one of the clutches continuing to transmit drive at a lower main pressure until the next required clutch is able to accept the input torque.

The shift elements, clutches and brakes are actuated hydraulically. Fluid pressure is applied to the required clutch and/or brake, pressing the plates together and allowing drive to be transmitted through the plates. The purpose of the shift elements is to perform power-on shifts with no interruption to traction and smooth transition between gear ratios.

Power Flow 1st Gear

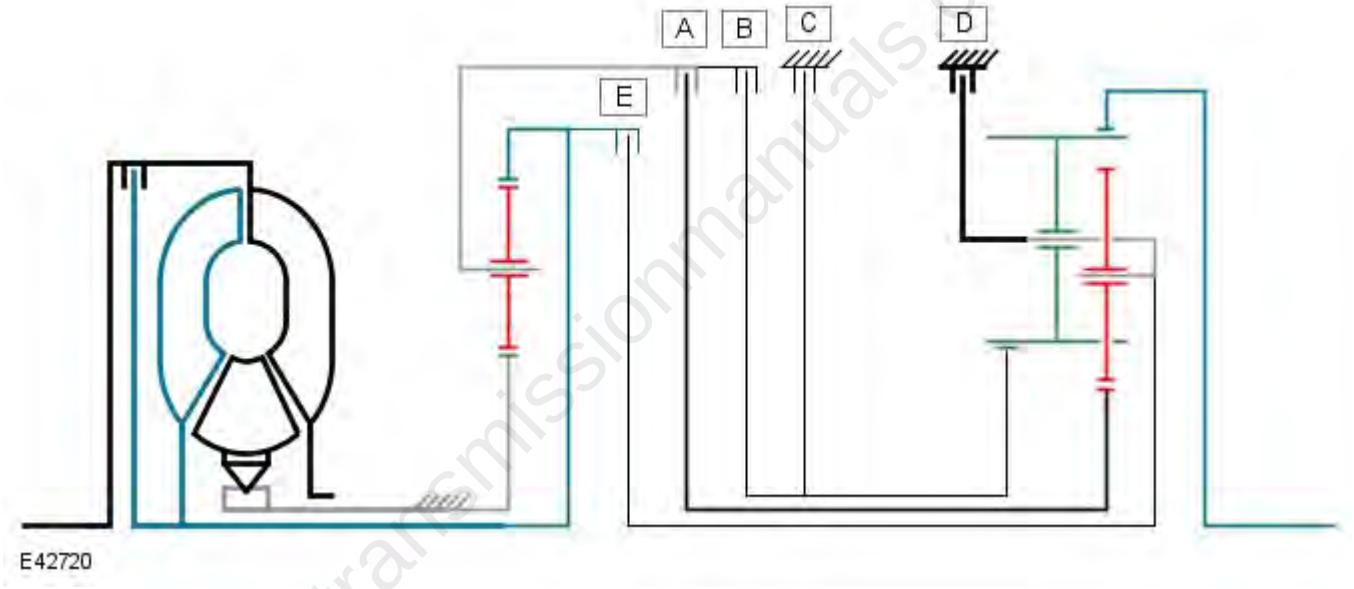

The gear selector lever and the manual selector valve spool are in the 'D' position. Engine torque is transmitted from the torque converter turbine shaft to the ring gear 1 of the single web planetary gear train and the outer plate carrier of clutch 'E'.

Ring gear 1 drives the planetary gears which rotate around sunwheel 1. This drives the planetary gear carrier 1 and also the outer plate carrier of clutch 'A' and the inner plate carrier of clutch 'B'.

When clutch 'A' is engaged, sunwheel 3 in the double web planetary gear train is driven and meshes with the short planetary gears.

The double web planetary gear train is locked against the transmission housing by brake 'D'. This allows ring gear 2 (output shaft) to be driven in the same direction as the engine via the long planetary gears.

- NOTE: Refer to 'Shift Elements' illustration for key

transmissionmanuals.com

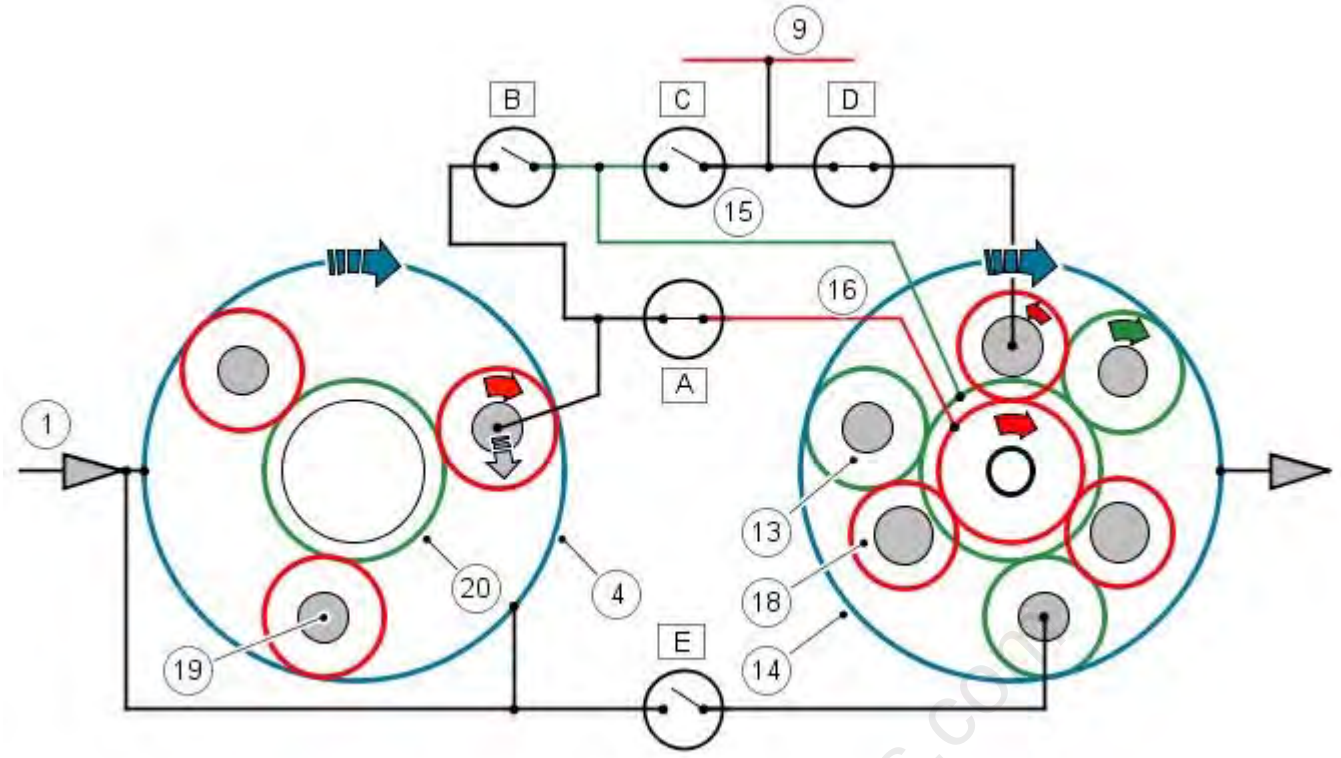

E42721

Power Flow 2nd Gear

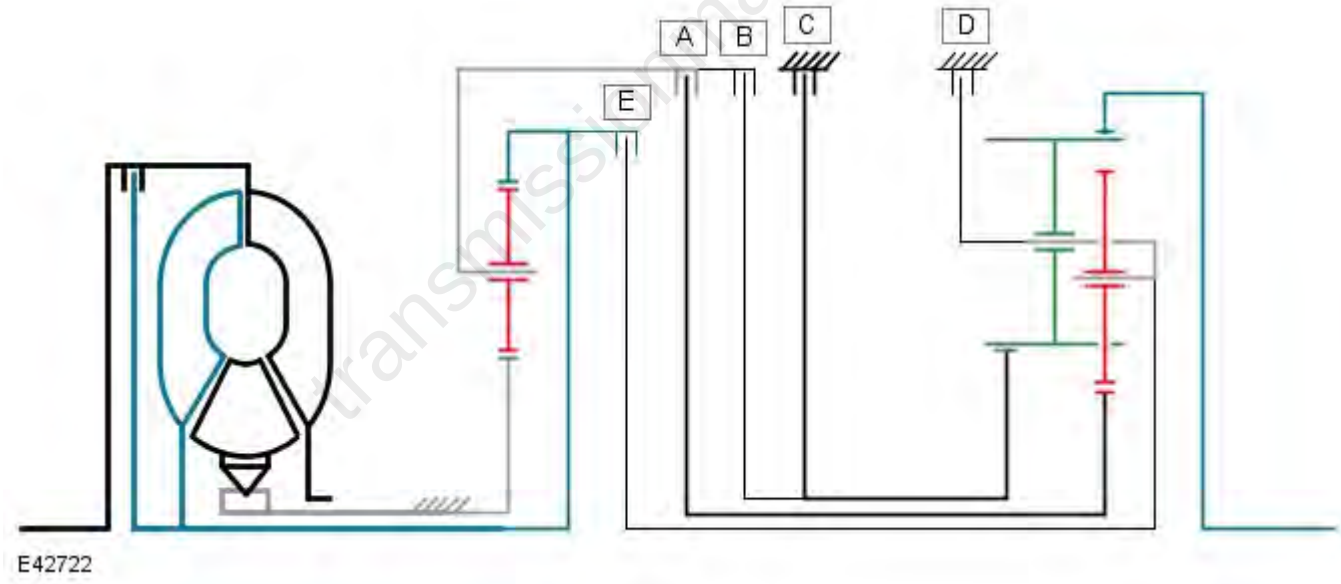

E42722

The gear selector lever and the manual selector spool valve are in the 'D' position. Engine torque is transmitted from the torque converter turbine shaft to the ring gear 1 of the single web planetary gear train and the outer plate carrier of clutch 'E'.

Ring gear 1 drives the planetary gears which rotate around sunwheel 1. This drives the planetary gear carrier 1 and also the outer plate carrier of clutch 'A' and the inner plate carrier of clutch 'B'.

When clutch 'A' is engaged, sunwheel 3 in the double web planetary gear train is driven and meshes with the short planetary gears.

Sunwheel 2 is locked to the transmission housing by brake clutch 'C'. The long planetary gears, which are also meshed with the short planetary gears, roll around the fixed sunwheel 2 and transmit drive to the double web planetary gear train carrier and ring gear 2 in the direction of engine rotation.

- NOTE: Refer to 'Shift Elements' illustration for key

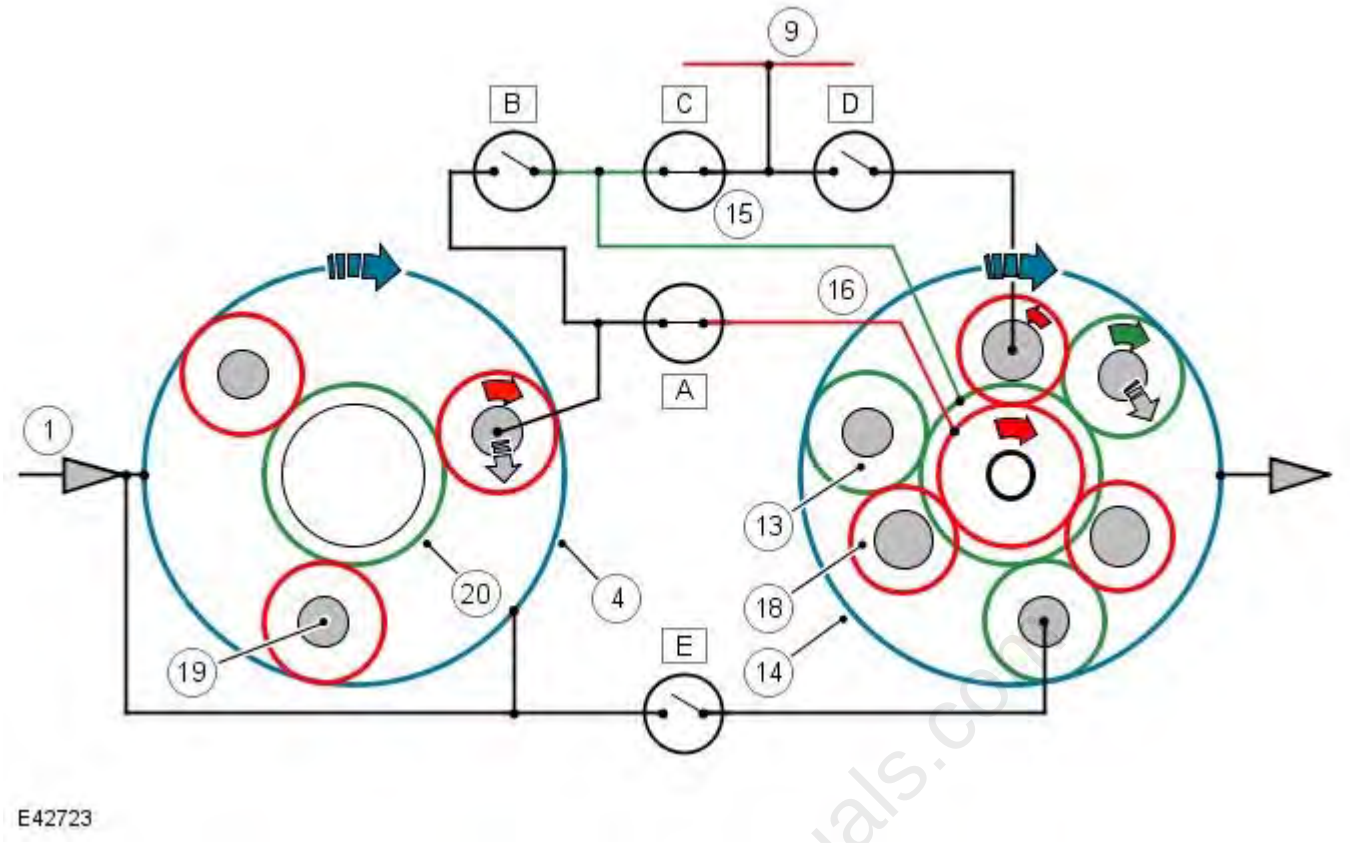

E42723

Power Flow 3rd Gear

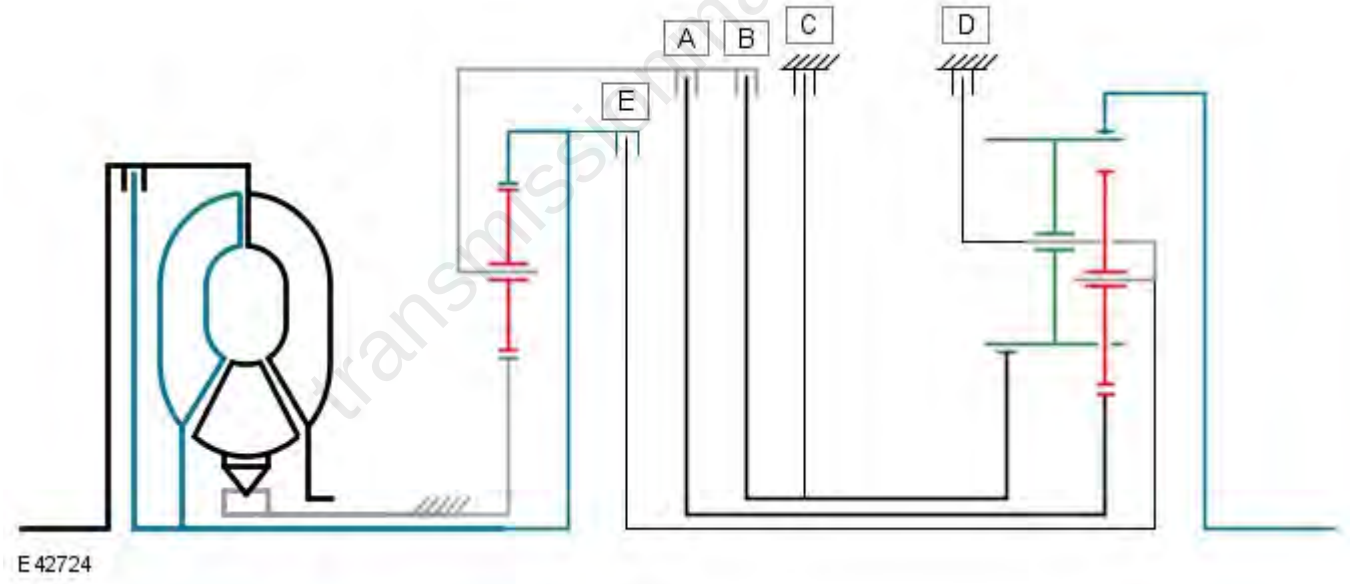

E42724

The gear selector lever and the manual selector spool valve are in the 'D' position. Engine torque is transmitted from the torque converter turbine shaft to the ring gear 1 of the single web planetary gear train and the outer plate carrier of clutch 'E'.

Ring gear 1 drives the planetary gears which rotate around sunwheel 1. This drives the planetary gear carrier 1 and also the outer plate carrier of clutch 'A' and the inner plate carrier of clutch 'B'.

When clutch 'A' is engaged, sunwheel 3 in the double web planetary gear train is driven and meshes with the short planetary gears.

Sunwheel 2 is driven via clutch 'B' which is engaged. The long planetary gears, which are also meshed with the short planetary gears, cannot roll around the fixed sunwheel 2 and transmit drive to the locked double web planetary gear train carrier in the direction of engine rotation.

- NOTE: Refer to 'Shift Elements' illustration for key

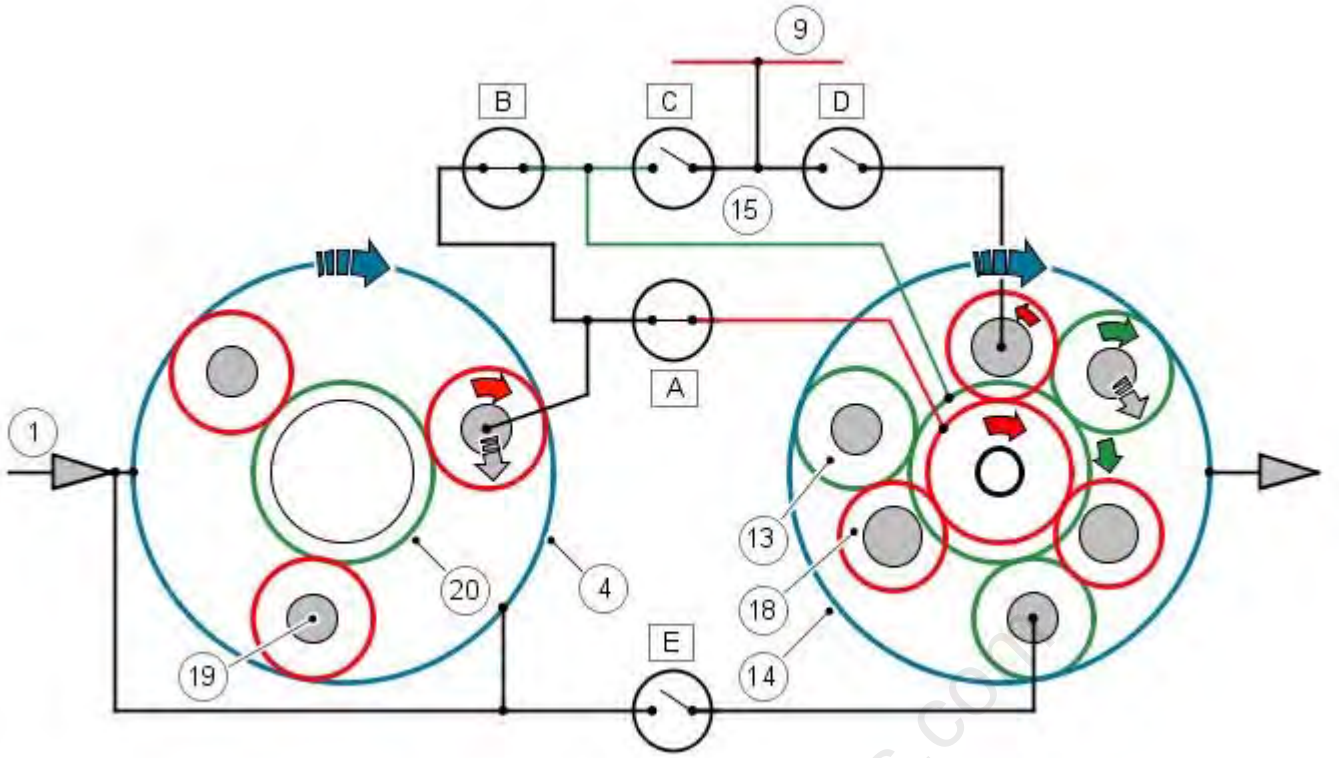

E42725

Power Flow 4th Gear

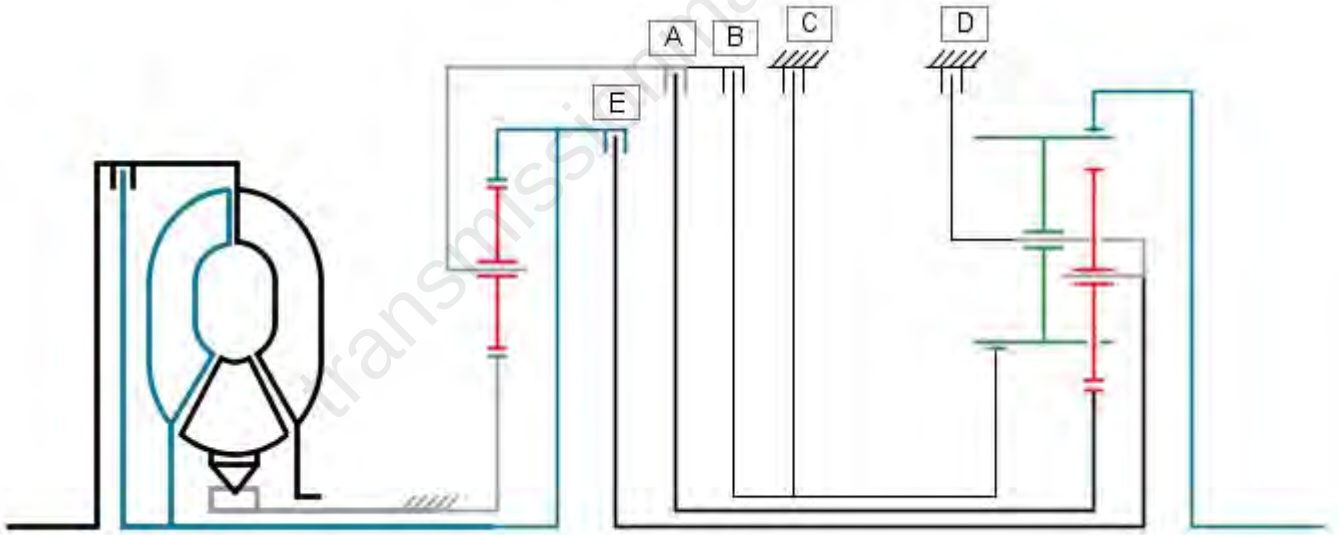

E42726

The gear selector lever and the manual selector spool valve are in the 'D' position. Engine torque is transmitted from the torque converter turbine shaft to ring gear 1 of the single web planetary gear train and the outer plate carrier of clutch 'E'.

Ring gear 1 drives the planetary gears which rotate around sunwheel 1. This drives the planetary gear carrier 1 and also the outer plate carrier of clutch 'A' and the inner plate carrier of clutch 'B'.

When clutch 'A' is engaged, sunwheel 3 in the double web planetary gear train is driven and meshes with the short planetary gears.

The double web planetary gear carrier is driven via clutch 'E' which is engaged. The long planetary gears, which are also meshed with the short planetary gears, and the double web planetary gear carrier, drive ring gear 2 in the direction of engine rotation.

- NOTE: Refer to 'Shift Elements' illustration for key

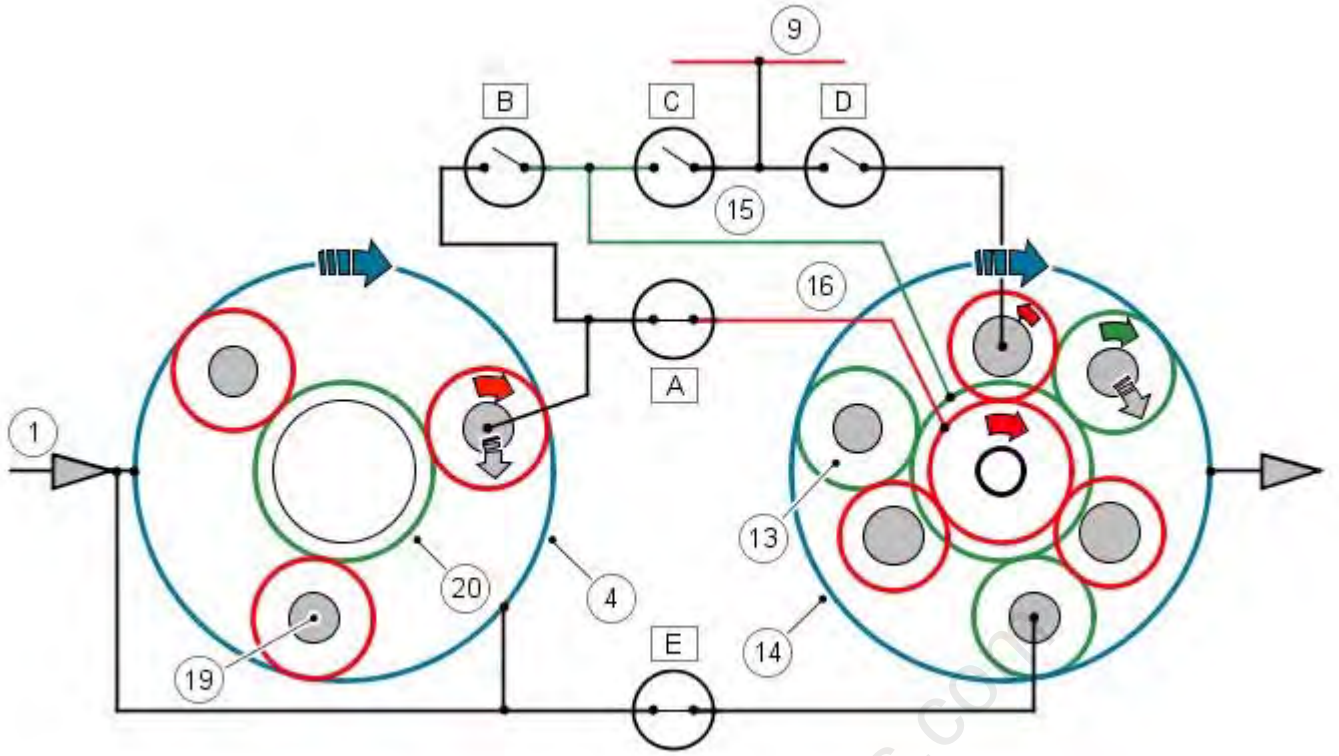

E42727

Power Flow 5th Gear

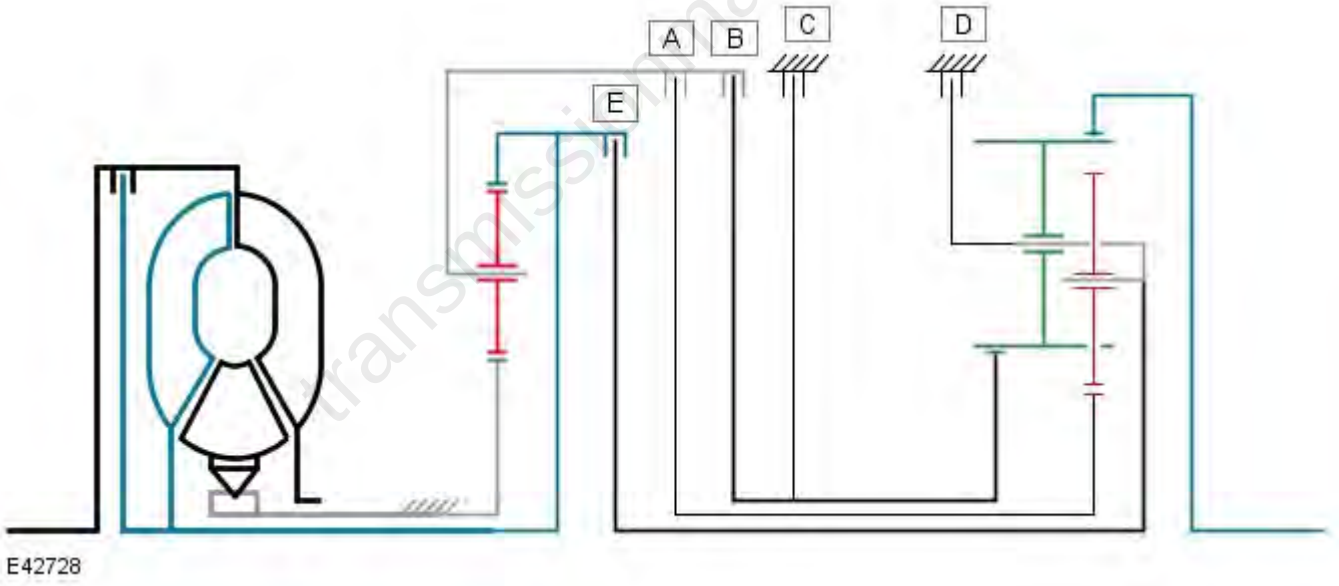

E42728

The gear selector lever and the manual selector spool valve are in the 'D' position. Engine torque is transmitted from the torque converter turbine shaft to ring gear 1 of the single web planetary gear train and the outer plate carrier of clutch 'E'.

Ring gear 1 drives the planetary gears which rotate around sunwheel 1. This drives the planetary gear carrier 1 and also the outer plate carrier of clutch 'A' and the inner plate carrier of clutch 'B'.

When clutch 'A' is engaged, sunwheel 3 in the double web planetary gear train is driven and meshes with the short planetary gears.

The long planetary gears, which are also meshed with the short planetary gears, and the double web planetary gear carrier, drive ring gear 2 in the direction of engine rotation.

- NOTE: Refer to 'Shift Elements' illustration for key

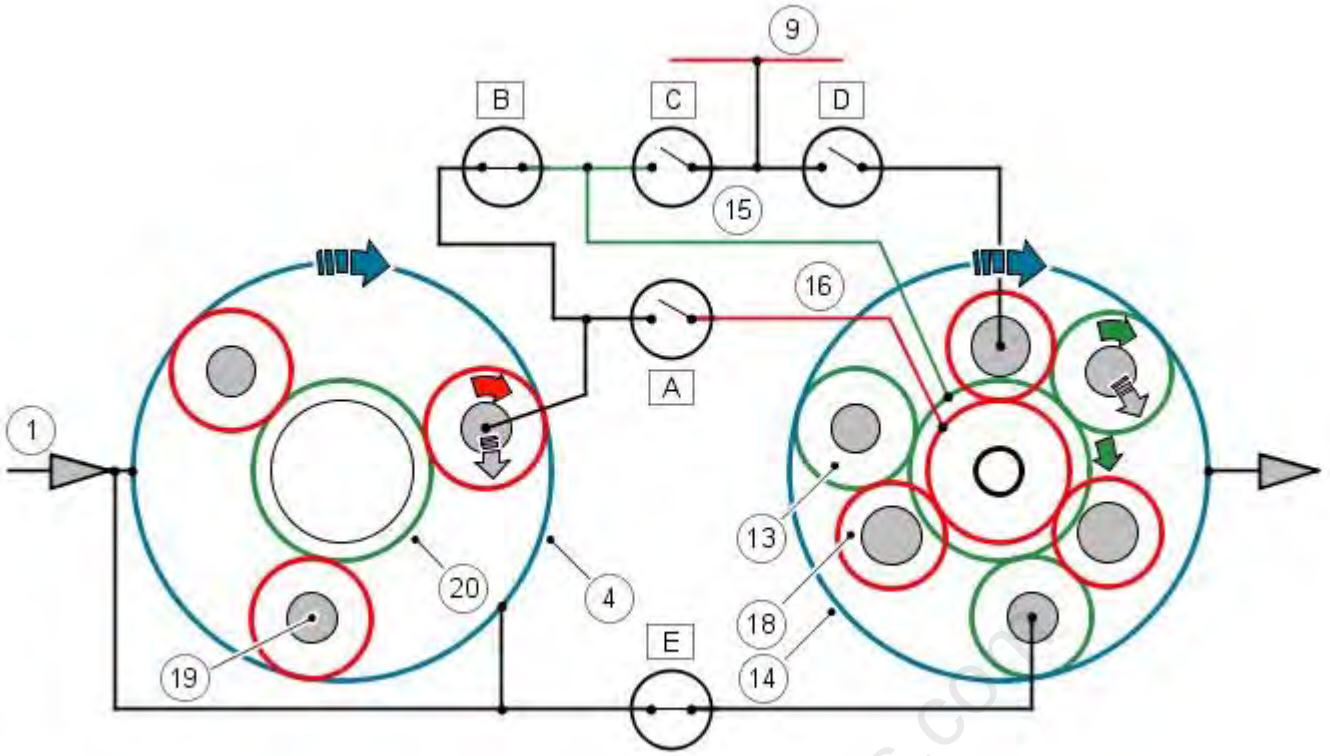

E42729

Power Flow 6th Gear

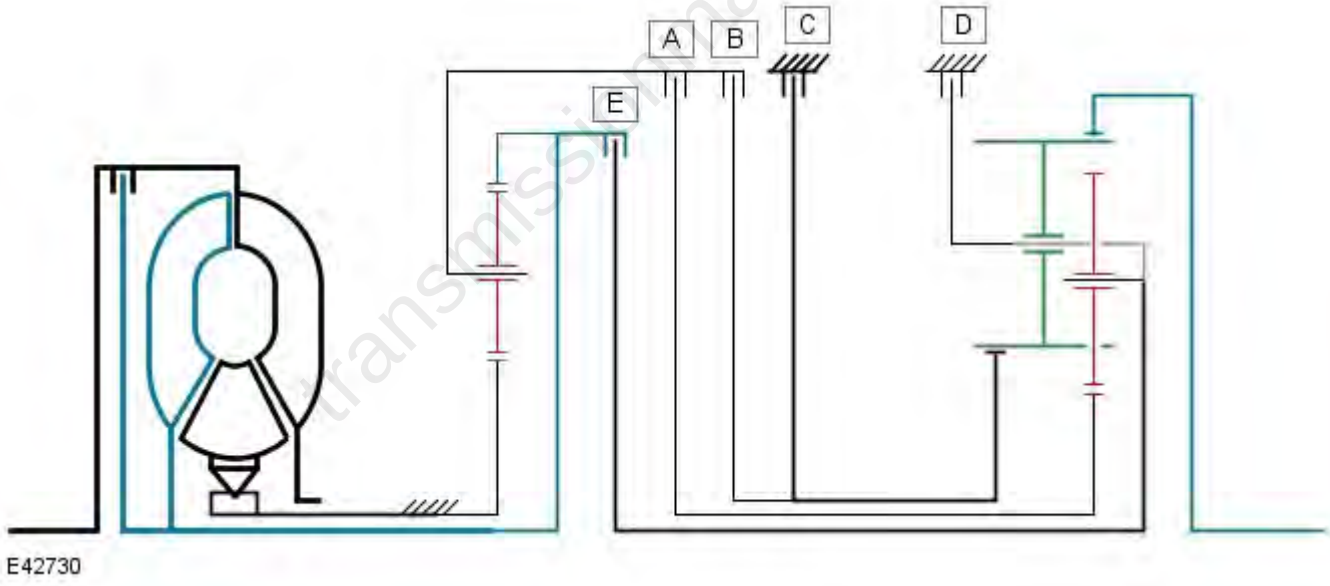

E42730

The gear selector lever and the manual selector spool valve are in the 'D' position. Engine torque is transmitted from the torque converter turbine shaft to ring gear 1 of the single web planetary gear train and the outer plate carrier of clutch 'E'.

Clutches 'A' and 'B' are released, removing the effect of the single web planetary gear train.

Clutch brake 'C' is applied which locks sunwheel 2 to the transmission housing.

Clutch 'E' is engaged and drives the double web planetary gear carrier. This causes the long planetary gears to rotate around the fixed sunwheel 2 and transmit drive to ring gear 2 which is driven in the direction of engine rotation.

- NOTE: Refer to 'Shift Elements' illustration for key

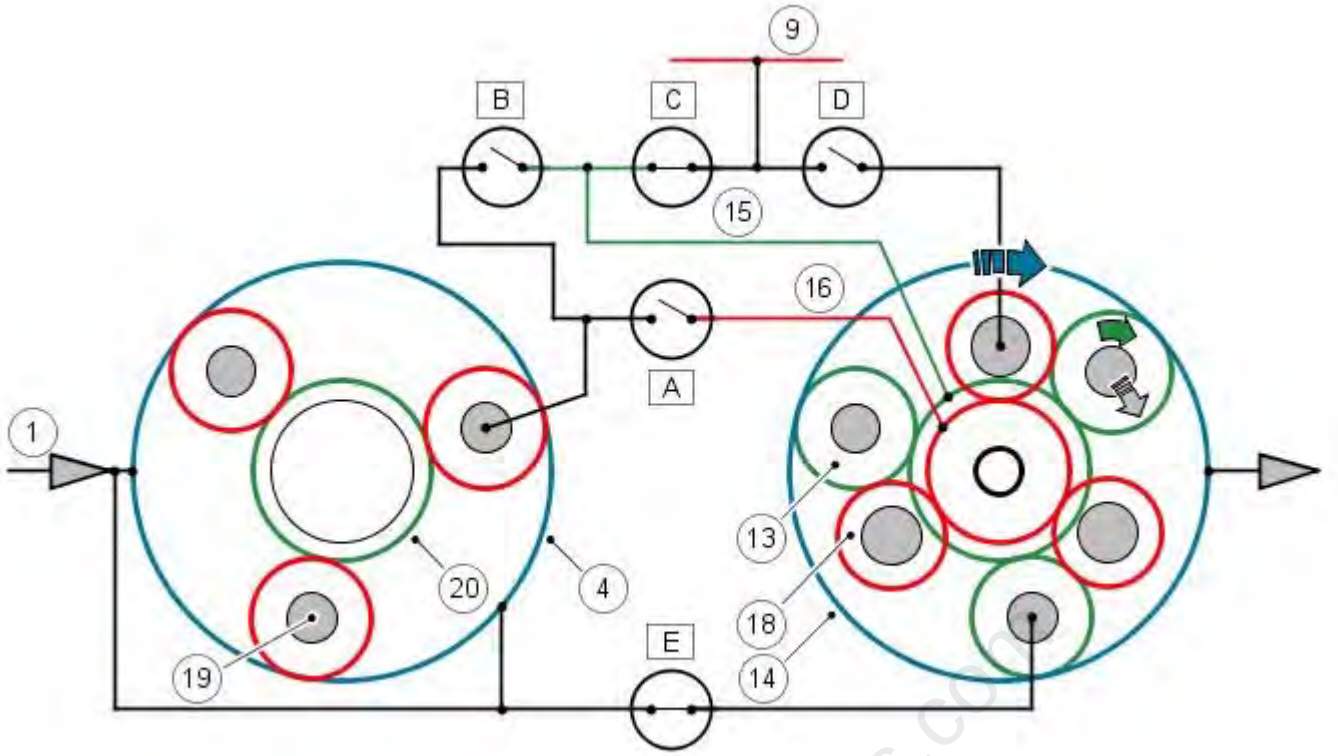

E42731

Power Flow Reverse Gear

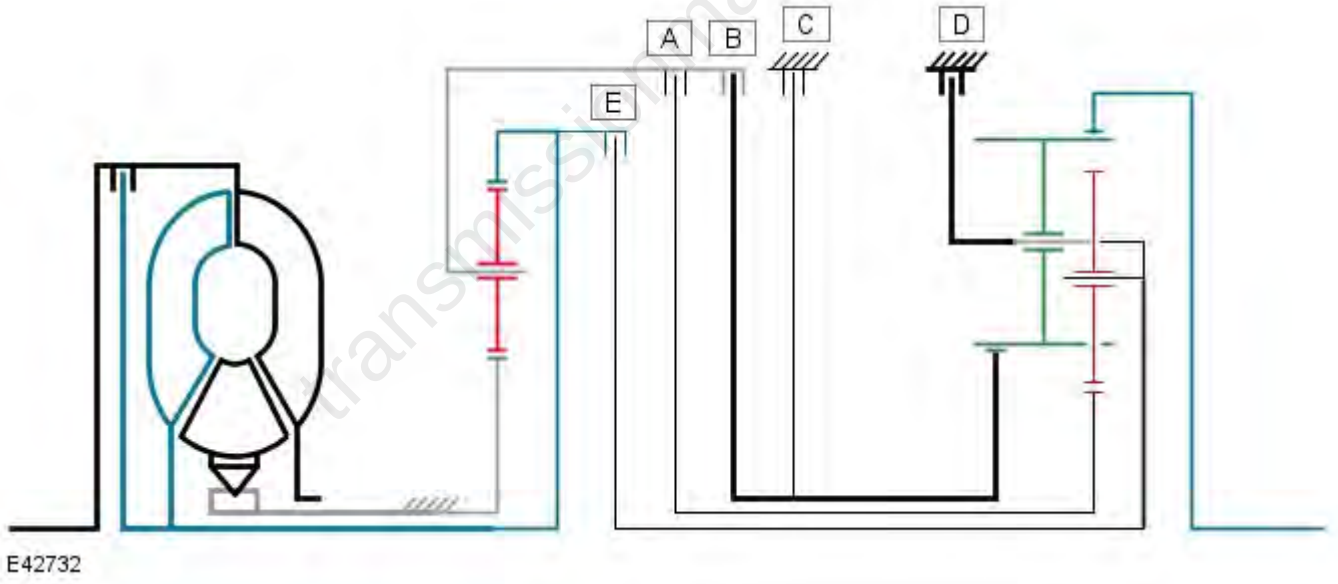

E42732

The gear selector lever and the manual selector spool valve are in the 'R' position. Engine torque is transmitted from the torque converter turbine shaft to ring gear 1 of the single web planetary gear train and the outer plate carrier of clutch 'E'.

Ring gear 1 drives the planetary gears of the single web planetary gear train which rotate around the fixed sunwheel 1. This transmits the drive to the single web planetary gear carrier, the outer plate carrier of clutch 'A' and the inner plate carrier of clutch 'B'.

With clutch 'B' applied, sunwheel 2 in the double web planetary gear train is driven and meshes with the long planetary gears.

The double web planetary gear carrier is locked to the transmission housing by brake clutch 'D'. This allows ring gear 2 to be driven in the opposite direction to engine rotation by the long planetary gears.

- NOTE: Refer to 'Shift Elements' illustration for key

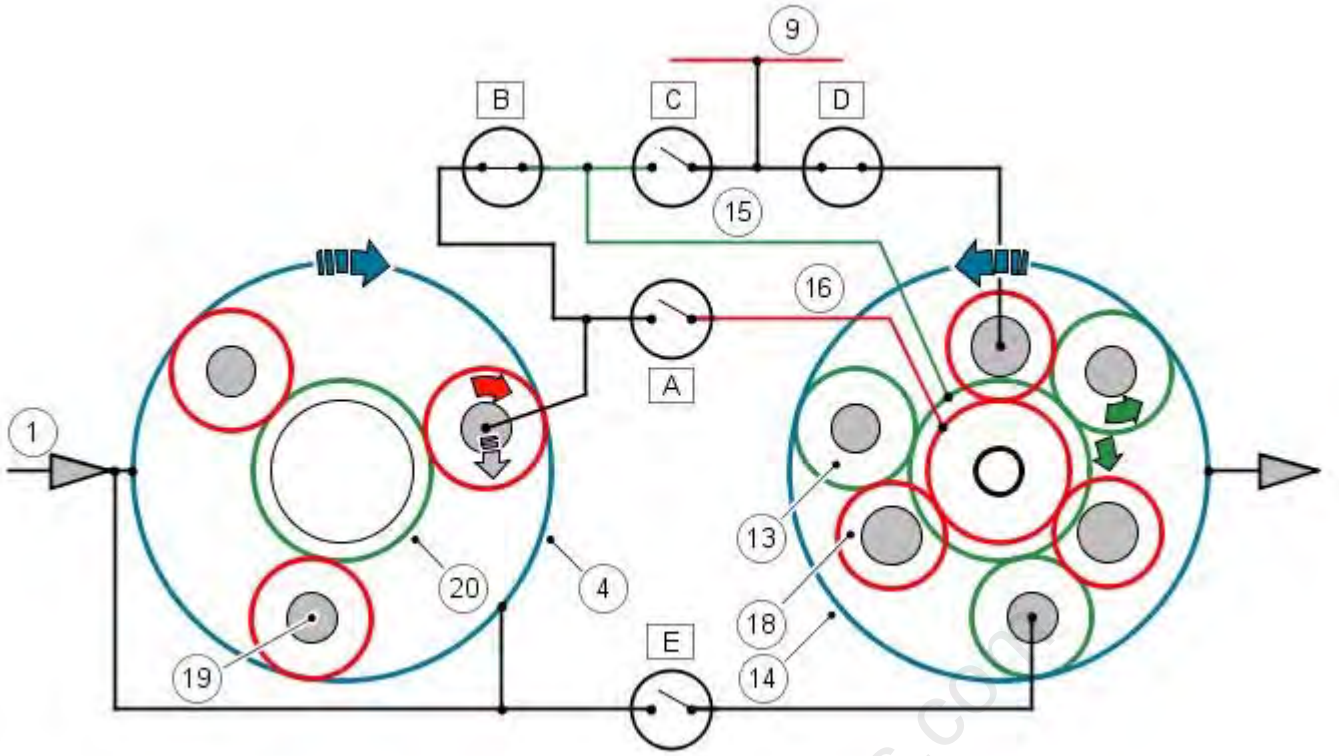

SELECTOR POSITION SWITCH

The Mechatronic valve block contains a position switch which is mechanically connected to the selector spool valve. The selector spool valve is connected by a selector shaft to the selector lever via a 'Bowden' selector cable.

The signals from the position switch are used by the TCM to determine the P, R, N or D selection made by the driver.

FLUID COOLING

The transmission fluid cooler is an integral part of the engine cooling radiator. The transmission is connected to the fluid cooler via flexible hoses and metal pipes.

- NOTE: 4.0L V6 Petrol shown, 4.4L V8 and TdV6 similar

transmissionmanuals.com

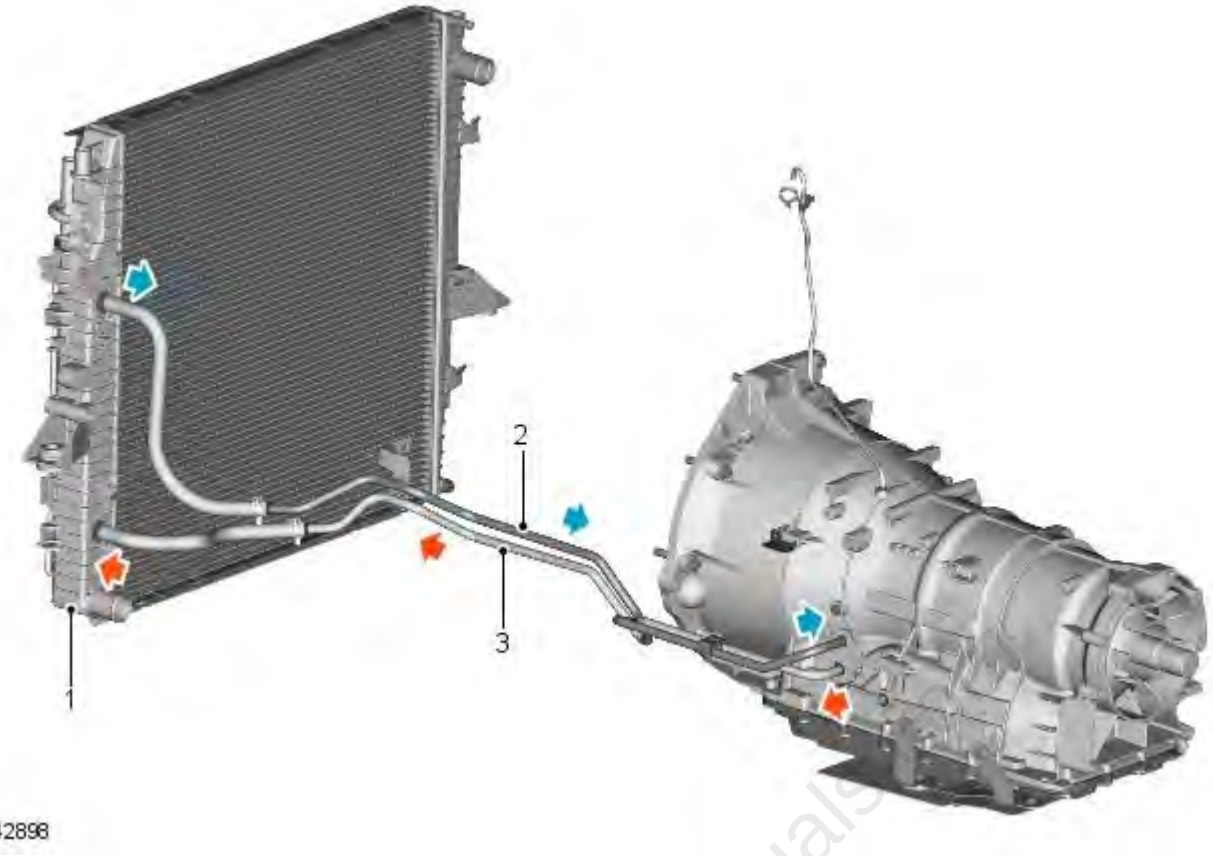

Item	Part Number	Description
1	-	Transmission cooler
2	-	Return pipe (To transmission)
3	-	Feed pipe (From transmission)

The transmission cooler is integrated into the left hand end tank of the engine cooling radiator. The transmission fluid is cooled by the temperature differential between the transmission fluid and the engine coolant and also by airflow over cooling fins on the end tank.

Fluid is supplied from the transmission fluid pump into the lower connection of the cooler. After passing through the cooler, the fluid passes out of the upper connection and is returned to transmission fluid pan.

GEAR SELECTOR LEVER ASSEMBLY

transmissionmanuals

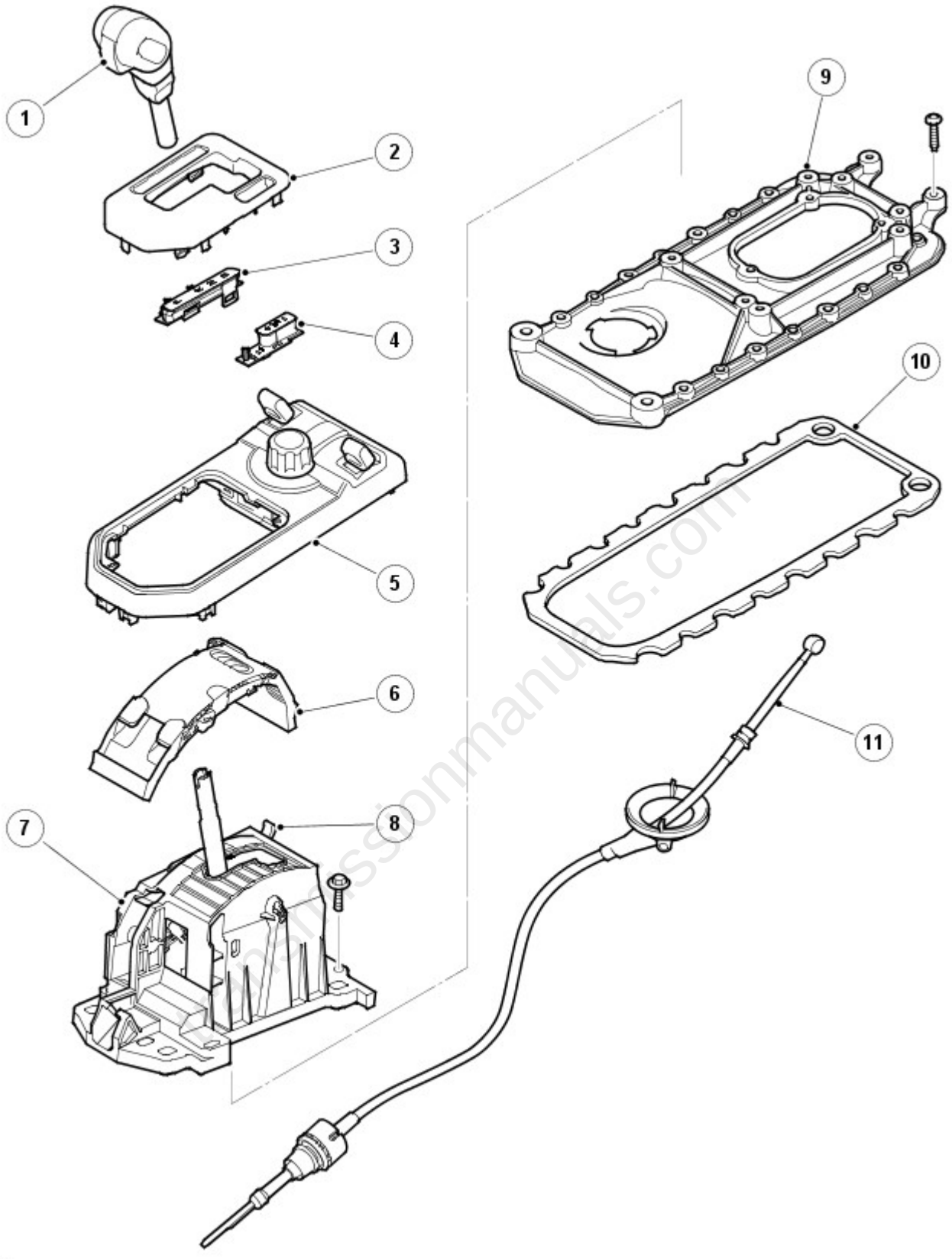

Item	Part Number	Description
1	-	Selector lever
2	-	Finisher
3	-	PRND display
4	-	M/S display
5	-	Switch pack and finisher
6	-	Shutter
7	-	Selector assembly
8	-	Interlock emergency release lever
9	-	Mounting plate
10	-	Seal

11	-	Selector cable

The gear selector lever assembly is located in a central position on the transmission tunnel, between the front driver and passenger seats and is secured to the transmission tunnel closure plate. The selector lever comprises a moulded plastic housing which provides for the location of the selector components.

The lever is connected to a crosspiece which allows for the selection of P, R, N, D in a forward or backward direction and selection between automatic and manual/sport mode in a left/right transverse direction.

When manual/sport mode is selected the lever can be moved in a forward or backward direction to select + or - for manual (CommandShift™) operation. If left in Sport mode all gear changes are performed automatically.

If Manual (CommandShift™) mode is selected, all gear changes are based on inputs received by the TCM from the manual +/- hall effect sensors located on the PCB.

The selector lever mechanism houses the following components:

- Electronic Printed Circuit Board (PCB)
- Shift Interlock solenoid
- Park and Neutral locking levers.

There are four selector lever positions and two additional positions for manual/sport operation:

- P (Park) - Prevents the vehicle from moving by locking the transmission
- R (Reverse) - Select only when the vehicle is stationary and the engine is at idle
- N (Neutral) - No torque transmitted to drive wheels
- D (Drive) - This position uses all six forward gears in high and low ranges
- M/S (Sport Mode) - This position uses all forward gears in 'D' but will upshift at higher engine speeds to improve acceleration
- + and - (Manual 'CommandShift™' mode) - Movement of the selector lever in the +/- positions, when the lever is in the M/S position, will operate the transmission in manual (CommandShift™) mode allowing the driver to manually select all six forward gears

The selector lever position is displayed to the driver on the selector position LED display and in the instrument cluster. In 'CommandShift™' mode, if a gear is selected but the TCM logic prevents selection of that gear, the requested gear will be initially displayed. The TCM will engage the next allowed gear and then display that gear.

Sport/Manual +/- CommandShift™ Switch

The PCB contains the hall effect sensors to activate the sport/manual mode and also the sensors which provide the +/- signals. When the selector lever is moved to the manual/sport position, the lower magnet located in the selector lever is moved within proximity of the M/S hall effect sensor on the PCB. This provides the momentary signal which is received by the TCM, which in turn initiates sport mode.

When the lever is moved to the + or - position, the magnet is moved within proximity of one of the hall effect sensors positioned either side of the M/S hall effect sensor. When an input from either the + or - sensors is received, manual CommandShift™ mode will be initiated. In this position a spring will move the selector lever back to the centre position when released. To leave the CommandShift™ mode, return the lever to the 'D' position.

Selector Position LED Display

The P, R, N, D LED display is located on the right hand side of the selector lever and the M/S (MANUAL/SPORT) +/- LED display is located on the left hand side of the selector lever. Each LED display is connected via a separate harness to the selector lever position switch. When the lever is moved to the required position, the switch contact for that position is made and the LED is illuminated.

P, R, N, D Position Switch

The P, R, N, D position switch is located within the Mechatronic valve block in the transmission. The switch is operated by movement of the selector lever to the P, R, N or D positions via the Bowden cable which is connected between the selector lever and the transmission selector shaft.

The switch is electrically connected to the TCM which outputs a common power supply to each of the four switch contacts. This power supply is also used by the two speed sensors and the fluid temperature sensor. Each of the four switch contacts have a separate feed input to the TCM which can detect which selector lever position has been selected.

Shift Interlock Solenoid

The shift interlock solenoid is located on the side of the selector lever assembly. The solenoid operates two locking levers which engage in the lower lever and lock it in the Park (P) and Neutral (N) positions. When the ignition is on or the engine is running, the solenoid is de-energised and prevents the lever from moving.

When energised, by the depression of the footbrake, the solenoid is energised and the selector lever may be moved from the P position. If the selector lever is left in the N position for more than 800m/s the solenoid will be energised and the selector lever will become locked in the N position. To move the selector lever from the N position in this condition the footbrake must be applied. This prevents the selector lever from being moved to the 'D' or 'R' position unintentionally and the application of the brakes also prevents the vehicle 'creeping' when the gear is engaged.

Movement of the selector lever from the 'P' or 'N' positions is also prevented if the TCM senses the engine speed is above 2500 rev/min, even if the brake pedal is depressed.

In the event of an electrical failure of the vehicle or failure of the interlock solenoid or its associated wiring, it is possible to move the selector lever from the Park 'P' position by removing the coin tray on left hand drive vehicles or the trim panel behind the park brake switch on right hand drive vehicles and lifting the white coloured tab on the rear of the selector lever assembly. Whilst holding the tab in this position move the selector lever from the 'P' position.

The selector lever will also be locked in the N position during the transfer box changing range from high to low or vice

transmissionmanuals.com

versa.

Selector Cable

A selector cable is used as a mechanical connection between the selector lever and the transmission. The cable is a Bowden type cable which is connected to the selector lever. Movement of the lever in the P, R, N or D positions moves the cable. Movement of the cable is prevented when the selector lever is in the Manual/Sport position.

The cable is passed through a sealing grommet in the floorpan and is attached to a bracket on the transmission. The inner cable is connected to a lever which is positively attached to the transmission selector shaft.

Movement of the selector lever in the P, R, N or D positions moves the inner cable which in turn moves the lever. The lever transforms the linear movement of the cable into rotary movement of the selector shaft. The rotation of the shaft moves the position switch located within the Mechatronic valve block and also moves the manual spool valve to the applicable position.

Inputs and Outputs

Connector C2658



E42931

The following table shows the connector pin details for the connector on the selector lever assembly.

Pin No.	Description	Input / Output
1	Ground	-
2	Park lock confirmation	Input
3	Ground	-
4	Sport/Manual switch	Output
5	CommandShift™ + (up shift)	Output
6	CommandShift™ - (down shift)	Output
7	Ignition position II supply 12V	Input
8	Permanent power supply 12V	Input
9	Shift Interlock solenoid +	Input
10	Shift Interlock solenoid -	Input
11	Selector indicator PARK LED	Output
12	Selector indicator REVERSE LED	Output
13	Selector indicator NEUTRAL LED	Output
14	Selector indicator DRIVE LED	Output
15	Selector indicator SPORT/MANUAL LED	Output
16	Selector indicator backlight	Output - PWM
17 - 18	Not used	-

INSTRUMENT CLUSTER

transmissionmanuals.com

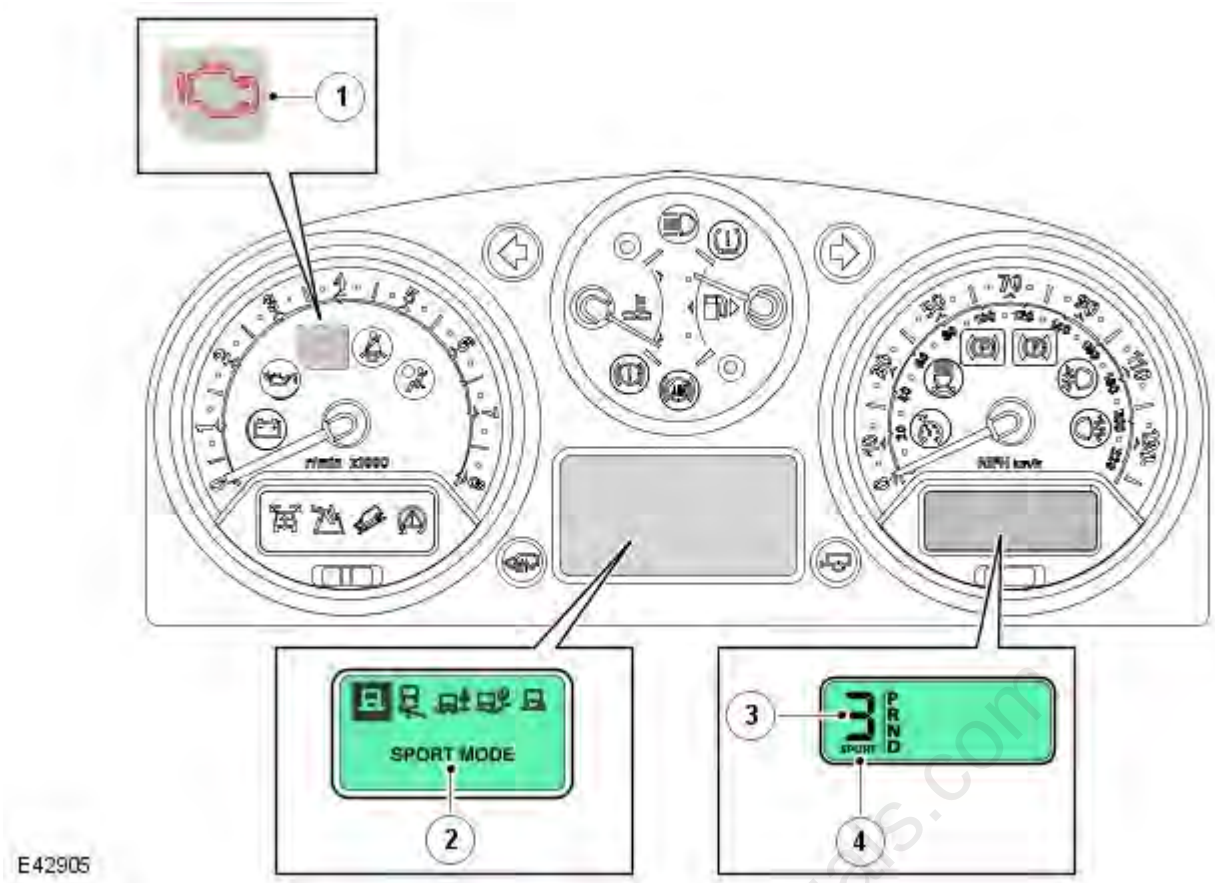

Item	Part Number	Description
1	-	Malfunction Indicator Lamp (MIL)
2	-	Message centre
3	-	Selector lever position indicator
4	-	Mode display

The instrument cluster is connected to the TCM via the high speed CAN bus. Transmission status is transmitted by the TCM and displayed to the driver in one of two displays in the instrument cluster.
For additional information, refer to: Instrument Cluster (413-01, Description and Operation).

Malfunction Indicator Lamp (MIL)

The MIL is located in the tachometer in the instrument cluster. Transmission related faults which may affect the vehicle emissions output will illuminate the MIL.

The MIL is illuminated by the ECM on receipt of a relevant fault message from the TCM on the high speed CAN. The nature of the fault can be diagnosed using T4 which reads the fault codes stored in the TCM memory.

Transmission Status Display

The transmission status display is located in a Liquid Crystal Display (LCD) within the speedometer housing. The LCD shows the selector lever position and the selected transmission mode. When the selector lever is in the manual CommandShift™ position, the selector lever position display will show the selected gear ratio.

The following table shows the displays and their descriptions.

Symbol	Description
P	Park selected
R	Reverse selected
N	Neutral selected
D	Drive selected
1	1st gear selected (Manual CommandShift™ mode)
2	2nd gear selected (Manual CommandShift™ mode)
3	3rd gear selected (Manual CommandShift™ mode)
4	4th gear selected (Manual CommandShift™ mode)
5	5th gear selected (Manual CommandShift™ mode)
6	6th gear selected (Manual CommandShift™ mode)

Message Centre Display

The message centre is located in the lower centre of the instrument cluster. The message centre is a LCD to relay vehicle status and operating information to the driver. The message centre can display messages relating to a number of the vehicle systems. The following list shows the possible transmission related messages:

- TRANSMISSION FAULT LIMITED GEARS AVAILABLE
- TRANSMISSION FAULT AND OVERHEAT
- TRANSMISSION FAULT

- TRANSMISSION OVERHEAT

TRANSMISSION CONTROL MODULE (TCM)

The TCM is an integral part of the Mechatronic valve block which is located at the bottom of the transmission, behind the fluid pan. The TCM is the main controlling component of the transmission.

The TCM processes signals from the transmission speed and temperature sensors, engine control module and other vehicle systems. From the received signal inputs and pre-programmed data, the module calculates the correct gear, torque converter clutch setting and optimum pressure settings for gear shift and lock-up clutch control.

The TCM outputs signals to control the shift control solenoid valve and the Electronic Pressure Regulator Solenoids (EPRS) to control the hydraulic operation of the transmission.

The ECM supplies the engine management data on the high speed CAN bus system. The TCM requires engine data to efficiently control the transmission operation, for example; flywheel torque, engine speed, accelerator pedal angle, engine temperature etc.

The steering angle sensor and the ABS module also supply data to the TCM on the high speed CAN bus sytem. The TCM uses data from these systems to suspend gear changes when the vehicle is cornering and/or the ABS module is controlling braking or traction control.

The selector lever is connected to the automatic transmission and the position switch in the transmission by a Bowden cable. Movement of the selector lever moves the position switch via the Bowden cable and the switch position informs the TCM of the selected position. The sport/manual +/- CommandShift switch passes manual/sport selections to the TCM. An additional switch provides a selector lever in park position signal. Once the selector lever position is confirmed, the TCM outputs appropriate information which is received by the instrument cluster to display the gear selection information in the message centre.

The Mechatronic valve block also contains the speed and temperature sensors. These are integral with the Mechatronic valve block and cannot be serviced individually. The speed sensors measure the transmission input and output speeds and pass signals to the TCM. The fluid temperature sensor is also located in the valve block and measures the fluid temperature of the transmission fluid in the fluid pan.

The TCM is connected to the starter relay coil. When the selector lever is in PARK or NEUTRAL, the module provides a ground for the coil allowing the starter relay to be energised and allow starter motor operation. If the selector lever is in any other position, the module will not provide the ground preventing starter motor operation.

Inputs and Outputs

Connector C0193

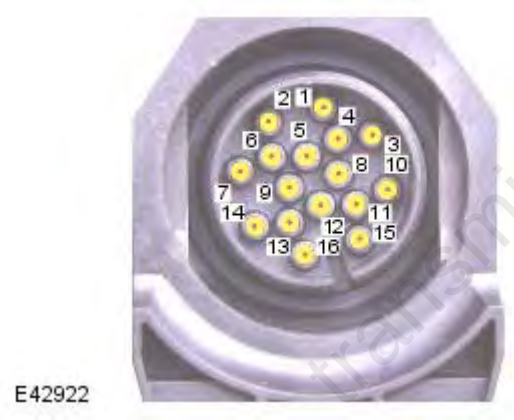

The following table shows the connector pin details for the connector on the transmission.

Pin No.	Description	Input / Output
1	Manual/sport shift programme selection	Input
2	CAN low	Input/Output
3	Diagnostic ISO9141 K Line bus	Input/Output
4	CommandShift™ - (downshift)	Input
5	CommandShift™ + (upshift)	Input
6	CAN high	Input/Output
7	Shiftlock power supply	Output
8	Not used	-
9	Ignition position II supply 12V	Input
10	Park/Neutral signal (starter inhibit)	Input
11	Shiftlock ground	Output
12	Selector lever in park position confirmation signal	Input
13	Ground 1	-
14	Permanent power supply 12V	Input
15	Not used	-
16	Ground 2	-

DIAGNOSTICS

The diagnostic socket is located in the lower instrument panel closing panel, on the driver's side, below the steering

column.

The diagnostic socket allows the exchange of information between the various modules on the bus systems and T4 or a diagnostic tool using ISO14229 protocol. The information is communicated to the socket via the high speed CAN bus from the TCM. This allows the retrieval of diagnostic information and programming of certain functions using T4 or a suitable diagnostic tool.

The TCM uses a P code strategy which stores industry standard Diagnostic Trouble Codes (DTC) relating to faults.

P Code	Component / Signal	Fault Description
P012100	Kickdown	Signal not plausible
P021900	Stall speed/engine overspeed	Signal not plausible
P050000	Wheel speeds plausible signal	General fault type
P050100	Wheels speeds plausible signal	Signal not plausible
P056100	Power supply (battery)	General fault type
P056200	Power supply (battery)	Signal voltage too low
P056300	Power supply (battery)	Signal voltage too high
P060100	EPROM/FLASH Checksum	Signal not plausible
P060300	Battery buffered RAM	Signal not plausible
P060500	EPROM/FLASH Checksum after software verification	Signal not plausible
P061300	Watchdog locking mechanism	General fault type Signal not plausible Short circuit to power supply Short circuit to ground Circuit break Short circuit to ground or power break Signal voltage too high Signal voltage too low Function specific, see monitoring function
P061300	Micro controller components	General fault type No change in signal Function specific, see monitoring function
P062F00	EEPROM communication	General fault type
P064100	Sensor supply voltage	Signal voltage too high or too low
P065700	Power supply pressure regulators and solenoids	Signal not plausible Circuit break
P065800	Power supply pressure regulators and solenoids	Short circuit to ground
P065900	Power supply pressure regulators and solenoids	Short circuit to power supply
P066800	Micro processor chip temperature sensor	Signal voltage too low
P066900	Micro processor chip temperature sensor	Signal voltage too high
P070000	Combination of impossible substitute functions	General fault type Signal not plausible Signal voltage too high
P070500	Selector position switch	Signal not plausible
P071000	Transmission oil temperature	Circuit break
P071100	Transmission oil temperature	General fault type Signal voltage too high
P071200	Transmission oil temperature	Short circuit to ground
P071300	Transmission oil temperature	Short circuit to power supply
P071600	Transmission turbine speed sensor	Short circuit to ground or power break Signal voltage too high Signal voltage too low
P071700	Transmission turbine speed sensor	Short circuit to power supply
P072000	Transmission output shaft speed sensor	Short circuit to power supply Short circuit to ground or power break
P072100	Transmission output shaft speed sensor	Signal voltage too high Signal not plausible
P072100	Falling gradient on output speed	Signal not plausible
P072900	Gear ratio - 6th gear	Signal not plausible
P073000	Gear ratio symptom	Signal not plausible
P073100	Gear ratio - 1st gear	Signal not plausible
P073200	Gear ratio - 2nd gear	Signal not plausible
P073300	Gear ratio - 3rd gear	Signal not plausible
P073400	Gear ratio - 4th gear	Signal not plausible
P073500	Gear ratio - 5th gear	Signal not plausible
P073600	Gear ratio - reverse gear	Signal not plausible General fault type
P074000	EPRS 6	Circuit break
P074100	Torque converter clutch permanently open	General fault type
P074800	EPRS 1	Signal voltage too high or too low
P075100	Shift control solenoid valve	Short circuit to power or ground Circuit break
P075200	Shift control solenoid valve	short circuit to ground
P075300	Shift control solenoid valve	Short circuit to power supply
P077800	EPRS 2	Signal voltage too high or too low
P078000	Gear load symptom	Signal voltage too high No change in signal

transmissionmanuals.com

P Code	Component / Signal	Fault Description
P078100	Gear load during shift 1st to 2nd	Signal voltage too high No change in signal
P078100	Gear load during shift 2nd to 1st	Signal voltage too high No change in signal
P078200	Gear load during shift 2nd to 3rd	Signal voltage too high No change in signal
P078200	Gear load during shift 3rd to 2nd	Signal voltage too high No change in signal
P078300	Gear load during shift 3rd to 4th	Signal voltage too high No change in signal
P078300	Gear load during shift 4th to 3rd	Signal voltage too high No change in signal
P078400	Gear load during shift 4th to 5th	Signal voltage too high No change in signal
P078400	Gear load during shift 5th to 4th	Signal voltage too high No change in signal
P079800	EPRS 3	Signal voltage too high or too low
P081C00	Lever locking mechanism	General fault type Signal not plausible
P082600	Manual/Sport switch module	Signal not plausible
P082900	Gear load during shift 4th to 5th	Signal voltage too high
P082900	Gear load during shift 5th to 6th	No change in signal
P082900	Gear load during shift 6th to 5th	No change in signal
P085000	Park/Neutral signal plausibility	Signal not plausible
P089700	Oil temperature monitoring	General fault type
P093800	Transmission oil temperature (cross-check against processor chip temperature)	Signal not plausible
P096000	EPRS 1	Short circuit to ground or power break Circuit break
P096200	EPRS 1	Short circuit to ground
P096300	EPRS 1	Short circuit to power supply
P096400	EPRS 2	Short circuit to ground or power break Circuit break
P096600	EPRS 2	Short circuit to ground
P096700	EPRS 2	Short circuit to power supply
P096800	EPRS 3	Short circuit to ground or power break Circuit break
P097000	EPRS 3	Short circuit to ground
P097100	EPRS 3	Short circuit to power supply
P178300	Hot shutdown	General fault type
P182500	Shift interlock solenoid	Short circuit to ground Short circuit to power supply Circuit break
P271600	EPRS 4	Signal voltage too high or too low
P271800	EPRS 4	Short circuit to ground or power break Circuit break
P272000	EPRS 4	Short circuit to ground
P272100	EPRS 4	Short circuit to power supply
P272500	EPRS 5	Signal voltage too high or too low
P272700	EPRS 5	Short circuit to ground or power break Circuit break
P272900	EPRS 5	Short circuit to ground
P273000	EPRS 5	Short circuit to power supply
P275900	EPRS 6	Signal voltage too high
P276100	EPRS 6	Short circuit to ground or power break
P276200	EPRS 6	Signal voltage too small
P276300	EPRS 6	Short circuit to power supply
P276400	EPRS 6	Short circuit to ground

transmissionmanuals.com

CONTROLLER AREA NETWORK (CAN)

The high speed CAN broadcast bus network is used to connect the powertrain modules. The CAN bus is connected between the following electronic units:

High Speed CAN Bus

- TCM
- Instrument cluster
- Air suspension module
- Steering angle sensor
- Rear differential module
- Centre console switch pack
- Electric park brake module
- Restraints control module
- Engine Control Module (ECM)
- ABS control module
- Adaptive front lighting control module
- Transfer box control module
- Adaptive cruise control module

- Diagnostic socket.

The CAN bus allows a fast exchange of data between modules. The CAN bus comprises two wires which are identified as CAN high (H) and CAN low (L). The two wires are coloured yellow/black (H) and yellow/brown (L) and are twisted together to minimise electromagnetic interference (noise) produced by the CAN bus messages.
For additional information, refer to: Communications Network (418-00, Description and Operation).

In the event of CAN bus failure, the following symptoms may be observed:

- Transmission operates in default mode
- Torque converter lock-up clutch control is disabled
- Gear position indication in instrument cluster message centre inoperative (this will also occur with any transmission fault).

DRIVING MODES

There are a number of different driving modes of operation. Some can be selected by the driver and some are automatically initiated by the TCM during driving:

- Normal mode
- Sport mode
- Manual (CommandShift™) mode
- Adaptive Shift Strategy (ASIS)
- Hill Descent Control (HDC) mode
- Cruise mode
- Hill mode
- Default (Limp home) mode
- Reverse lock-out mode
- Cooling strategy.
- Curve recognition mode
- Fast off recognition

Normal Mode

Normal mode is automatically selected by the TCM on power up. In this mode all automatic and adaptive modes are active. Normal mode uses gear shift and lock-up maps to allow for vehicle operation which offers fuel consumption and emissions or driveability depending on the driving style. If the transmission is operated in sport or manual mode and the selector lever is moved to the 'D' position, normal mode is automatically resumed.

Sport Mode

The sport mode operates in high range only and provides enhanced acceleration and responsiveness. In sport mode the TCM uses shift maps which allow the transmission to downshift more readily, hold gears for longer at higher engine speeds, and limits the transmission to the first five gears (6th gear is not used).

Sport mode is selected by moving the selector lever to the left into the 'M/S' position. When the sport mode is first selected, 'SPORT' is displayed in the message centre for 6 seconds and, if 6th gear is currently engaged, the TCM downshifts to 5th.

Manual (CommandShift™) Mode

Manual mode allows the transmission to operate as a semi-automatic 'CommandShift™' unit. The driver can change up and down the six forward gears with the freedom of a manual transmission.

Shift maps are provided for manual mode to protect the engine at high engine speeds. The TCM will automatically change up to a higher gear ratio to prevent engine overspeed and change down to a lower gear ratio to avoid engine labouring and stalling.

When kickdown is requested the TCM downshifts at least 2 gears.

When the vehicle is stationary, to drive off the driver can select 1st , 2nd or 3rd gear in low and high range. Any other gear selection will be rejected by the TCM.

When driving off, upshifts can be pre-selected by making + selections with the selector lever for the number of upshifts required. The TCM then automatically performs a corresponding number of upshifts when the appropriate shift points are reached. So, for example, when starting off in 1st gear, if three + selections are made in quick succession, the TCM will automatically change up through the box to 4th gear as the vehicle accelerates, without any further selections being made.

In manual mode a low gear can be selected to provide engine braking for descending a slope without HDC or continuous use of the brake pedal. The driver can prepare for the end of the descent by moving the selector lever to D. The TCM will maintain the low gear and only revert to automatic shift control when the throttle is opened and vehicle speed increases.

Adaptive Shift Strategy (ASIS)

The ASIS system is a new feature on automatic transmissions. With the TCM linked via the CAN bus to other vehicle systems, signals are received which can allow the TCM to calculate the way in which the vehicle is being driven. The type of signals include the following:

- Longitudinal and lateral acceleration
- Engine speed
- Engine torque
- Oil temperature
- Accelerator pedal position
- Wheel speed.

transmissionmanuals.com

Using these signals, additional transmission control can be obtained. The TCM can calculate when the vehicle is cornering, all wheels are gripping, the driver is braking or if the driver is accelerating. This is the conventional 'Adaptive' transmission control. ASIS uses this system but adds the continuous adaptation of the gear changes to the individual driving style of the driver.

HDC Mode

The HDC mode assists the ABS module in controlling the downhill speed of the vehicle. When HDC is selected on, the ABS module selects the most appropriate gear for the descent, to maximise engine braking.

Cruise Mode

When speed control is activated, the TCM receives a cruise active message on the CAN bus. The TCM activates a speed control map which prevents locking and unlocking of the torque converter clutch and minimises up and down shifts.

Hill Mode

Hill mode is initiated by the TCM when the engine torque, via ECM signals on the CAN bus, exceeds the theoretical load curve for normal operation. The TCM monitors this signal to determine when the vehicle is travelling up or down a steep gradient.

In hill mode the TCM adopts one of four shift maps, three uphill and one downhill. The shift map chosen depends on the severity of the slope as determined from the engine signals and the appropriate gear is selected to assist with the ascent or descent.

Hill mode can also be initiated when the vehicle is at very high altitudes or ambient temperatures, and also when the vehicle is towing.

Default (Limp Home) Mode

If a transmission fault is detected by the TCM, the TCM adopts a limp home mode strategy. 'TRANS. FAILSAFE' is displayed in the message centre and, if the fault has an effect on engine emissions, the MIL will also be illuminated.

In default mode, P, R and N functions operate normally (if the fault allows these selections) and the TCM locks the transmission in 3rd or 5th gear to allow the driver to take the vehicle to the nearest dealer. The torque converter lock-up clutch is disabled and reverse lock-out will not function.

If the vehicle is stopped and subsequently restarted in the default mode condition, the TCM operates normally until the fault which caused the condition is detected again.

When limp home mode is active, the gear position indicator will show one of the following letters which defines the fault type:

- 'F' - transmission is operating in limp home mode
- 'H' - transmission has reached overheat threshold temperature and transmission is operating in limp home mode
- 'E' - CAN bus is off and transmission is operating in limp home mode.

If electrical power is lost and the transmission is operating in mechanical limp home mode, the selector lever will not be locked in the 'N' position by the shift interlock solenoid. The lever will be locked in the 'P' position and can only be released by using the interlock emergency release lever or by correcting the electrical fault.

Reverse Lock-Out Mode

When the vehicle is travelling forwards, selecting reverse could cause transmission damage. To protect against this, reverse gear is prohibited if the vehicle is travelling forwards at a road speed above 5 mph (8 km/h).

Cooling Strategy

The purpose of the cooling strategy is to reduce engine and transmission temperatures during high load conditions, when towing a trailer for example. Under these conditions the engine and transmission may generate excessive heat.

If the transmission fluid temperature increases to 125ºC (257ºF) or higher, the TCM employs the cooling strategy. The message 'TRANSMISSION OVERHEAT' is displayed in the message center.

The strategy uses a specific shift and torque converter lock-up clutch map. This map allows torque converter clutch lock-up and gear shifts to operate outside of their normal operation. This will reduce the engine speed and/or slip in the torque converter, therefore reducing heat generated by the engine and the transmission.

If the transmission fluid temperature increases to 137ºC (278ºF) or higher, the transmission will use the default (limp home mode). 'H' is displayed in the gear position indicator. If the temperature exceeds 140ºC (284ºF), CAN bus transmission is disabled and 'E' is displayed in the gear position indicator.

The cooling strategy is cancelled when the transmission fluid temperature decreases to less than 120ºC (248ºF) or below.

Curve Recognition

Curve recognition is activated when high levels of lateral acceleration and/or steering angle are detected via the ABS module and steering angle sensor signals on the CAN bus. When this condition is detected, the TCM prevents the transmission from changing to a higher gear to assist with cornering. When the vehicle completes it manoeuvre, the transmission will shift to the correct ratio.

Fast Off Recognition

Fast off recognition is activated when the TCM detects that the driver has backed off the accelerator pedal quickly in a 'change of mind' manoeuvre. This is detected by monitoring for a high level of negative pedal angle from the engine

transmissionmanuals.com

control module signal on the CAN bus. If this condition is detected, the TCM holds the current gear ratio to allow the driver to complete his original action without the need for a downshift. The mode remains active for a predetermined time period or if the driving style remains passive.

Terrain Response™ Mode

If the vehicle has the Terrain Response system fitted, the following additional modes are available.
For additional information, refer to: Ride and Handling Optimization (204-06 Ride and Handling Optimization, Description and Operation).

Grass/Gravel/Snow

When the driver selects the Terrain Response grass/gravel/snow special program with the transfer box in either high or low range, the TCM uses a specific set of shift and torque converter maps to optimise the delivery of torque to the wheels and to minimise wheel slip in these terrains. To assist with the vehicle moving from a standstill, the TCM automatically selects 2nd gear in high range and 3rd gear in low range. This special program is fully integrated with hill mode to enhance vehicle control during ascents and descents.

Mud/Ruts

When the driver selects the Terrain Response mud/ruts special program with the transfer box in either high or low range, the TCM uses a specific set of shift and torque converter maps to optimise vehicle traction in this terrain.

Sand

When the driver selects the Terrain Response sand special program with the transfer box in either high or low range, the TCM uses a specific set of shift and torque converter maps to optimise the tractive performance in sand by holding onto gears longer and downshifting more readily. This mode is fully integrated with the hill mode to further enhance performance during ascents.

Rock Crawl

When the driver selects the Terrain Response rock crawl special program, which is only available with the transfer box in low range, the TCM uses a specific shift map which maximises torque delivery at slow speeds associated with this type of terrain.

TRANSMISSION FAULT STATUS

If the TCM detects a fault with the transmission system, it will enter a default mode to prevent further damage to the transmission and allow the vehicle to be driven.

When a fault is detected a CAN message is sent from the TCM and is received by the instrument cluster. The instrument cluster illuminates the MIL and displays 'TRANS. FAILSAFE' in the message centre.

Some transmission faults may not illuminate the MIL or display a fault message, but the driver may notice a reduction in shift quality.

ENGINE SPEED AND TORQUE MONITORING

The ECM constantly supplies the TCM with information on engine speed and torque through messages on the CAN bus. The TCM uses this information to calculate the correct and appropriate timing of shift changes.

If the messages are not received by the ECM, the TCM will implement a back-up strategy to protect the transmission from damage and allow the vehicle to be driven.

In the event of an engine speed or torque signal failure, the transmission will adopt the electrical limp home mode with the transmission operating in a fixed gear.

TOWING FOR RECOVERY

The following procedure must be used to ensure that the vehicle is towed in a safe condition and damage to the vehicle transmission systems is prevented.

- Secure the towing attachment from the recovery vehicle to the towing eye of the vehicle to be recovered.
- Make sure that the hand brake is on. Turn the ignition key to the ignition position II.
- Apply the footbrake and move the automatic transmission selector lever to the neutral position. If electrical power is not available, use the manual interlock release tab on the selector lever to move the lever to the neutral position.
- Make sure that the ignition is in the auxiliary position I or, if the stop lamps and turn signal indicators are required, in the ignition position II.
- Make sure that the hand brake is released before the vehicle is towed.
- The vehicle can only be towed for a maximum of 31 miles (50 km) at a maximum speed of 30 mph (50 km/h). Towing the vehicle for longer distances and/or faster speeds will damage the transmission.

WARNING: Do not remove the key or move the ignition switch to position 'O' when the vehicle is being towed. The steering lock will be engaged preventing the steering from being turned.

With the engine not running, the brake booster and power steering pump will be inoperative. Care must be taken to ensure the vehicle is manoeuvred and driven accordingly.

CONTROL DIAGRAM

• NOTE: **A** = Hardwired; **D**= High Speed CAN Bus

transmissionmanuals.com

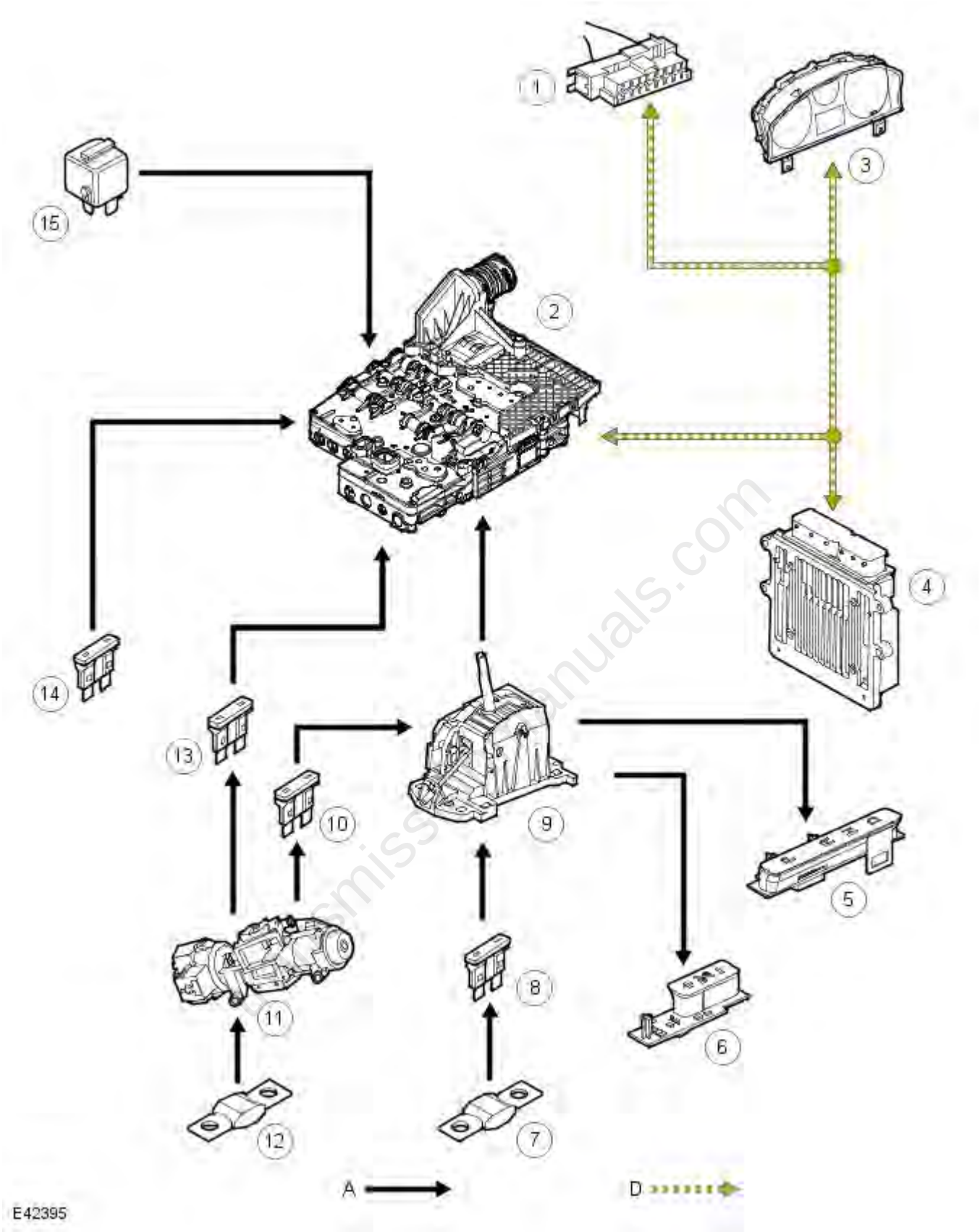

Item	Part Number	Description
1	-	Diagnostic socket
2	-	Mechatronic Valve (including TCM, sensors and solenoids)
3	-	Instrument cluster
4	-	Engine Control Module (ECM)
5	-	Selector indicator
6	-	Selector indicator
7	-	Fusible link 7E (50A)
8	-	Fuse 43P (5A)
9	-	Selector lever assembly
10	-	Fuse 33P (5A)
11	-	Ignition switch

12	-	Fusible link 10E (30A)
13	-	Fuse 27P (5A) – Ignition feed
14	-	Fuse 4E (10A) – Permanent feed
15	-	Starter relay

transmissionmanuals.com

Published: 11-May-2011

Automatic Transmission / Transaxle - V6 4.0L Petrol - Automatic Transmission

Diagnosis and Testing

Principle of Operation

For detailed description of the automatic transmission system and operation, refer to the relevant Description and Operation sectin of the workshop manual. REFER to: Automatic Transmission (307-01B Automatic Transmission/Transaxle - V6 4.0L Petrol, Description and Operation).

Inspection and Verification

This section is intended to provide a means for the technician to diagnose transmission component faults, rather than replacing the entire unit.

However, there are a number of situations where the replacement of the unit is the only practical solution, and this section will cover the diagnosis necessary to gather the information required for transmission replacement to be authorized by the warranty prior approval program (WPAP) where it applies, as well as covering the diagnostic trouble codes (DTCs) stored by the control module.

The basic checks of the transmission (fluid condition and level, etc) should be carried out first, and this will mean using the approved diagnostic system or other equipment with data logging facility to monitor temperatures, etc.

For information on the operation of the transmission, refer to the relevant workshop manual section.

1. **1.** Verify the customer concern.
2. **2.** Visually inspect for obvious signs of mechanical or electrical damage.

Visual Inspection

Mechanical	Electrical
• Fluid condition • Fluid level • Fluid leaks • Fluid cooler • External linkages • Gear selector lever	• Fuses • Wiring harnesses • Electrical connector(s) • Transmission control module (TCM) • Engine control module (ECM)

3. **3.** If an obvious cause for an observed or reported concern is found, correct the cause (if possible) before proceeding to the next step.
4. **4.** Use the approved diagnostic system or a scan tool to retrieve any DTCs before moving onto the DTC index.
    - Because the DTCs are stored in more than one module, a complete vehicle read is recommended
    - Make sure that all DTCs are cleared following rectification.

Preliminary Inspection

1. **1.** As much information as possible should be obtained from the owner/driver about the fault in order to assist with the diagnosis. Time spent on this will reduce the necessity for extensive road testing and possible missed diagnosis.
    - The information required for WPAP is still useful as an aid to diagnosis, even where the system is not in operation

Required information for WPAP (where applicable)

- The nature of the fault (loss of drive, slip, judder, gear shift quality, noise, etc)
- The frequency with which the fault occurs
- The conditions under which the fault occurs, including temperature (coolant and ambient), selected gear, road speed, engine speed, and any specific conditions
- Check and rectify non-transmission related DTCs before continuing with transmission diagnosis

2. **2.** Record the vehicle details, including:

- Service history
- The transmission serial number
- The transmission software level

3. **3.** Visually inspect the transmission for fluid leaks, damage, etc.
4. **4.** Check the transmission fluid condition.

• NOTE: Fluid condition is a good indicator of the transmission internal condition. If the fluid is burnt and/or contaminated, this would usually mean the internal damage to the transmission is at such a level that unit replacement is the best option. Compare the fluid drained from the transmission with fresh fluid for color and odor.

5. **5.** Check the transmission fluid level. Refer to the relevant workshop manual section.

• NOTE: This is crucial to the operation of the transmission, and the procedure must be closely followed to avoid inaccurate diagnosis, with the resultant possible rejection of a warranty claim.

transmissionmanuals.com

6. **6.** Check the engine idle speed and throttle sensor using the approved diagnostic system or a scan tool.
7. **7.** Check the transmission selector cable adjustment. Refer to the relevant workshop manual section.
8. **8.** Check the transmission range sensor adjustment.
    - A comprehensive procedure for transmission range sensor setting is accessible through the approved diagnostic system.

If any faults are found and rectified in the above sequence, clear any DTCs and test the vehicle for normal operation.

If a failure condition is found indicating the need to renew the transmission assembly, the request must go through the warranty prior approval program (where applicable) before work is begun.

DTC Index

For a list of Diagnostic Trouble Codes (DTCs) that could be logged on this vehicle, please refer to Section 100-00.
REFER to: Diagnostic Trouble Code (DTC) Index - DTC: Transmission Control Module (TCM) - Bosch (100-00 General Information, Description and Operation).

transmissionmanuals.com

Published: 11-May-2011

Automatic Transmission / Transaxle - V6 4.0L Petrol - Transmission Fluid Drain and Refill

General Procedures

- WARNINGS:

Observe due care when draining transmission fluid as the fluid can be very hot.

Observe due care when working near a hot exhaust system.

All vehicles

1. WARNING: Do not work on or under a vehicle supported only by a jack. Always support the vehicle on safety stands.

Raise and support the vehicle.

2. Remove the transmission undershield.

- Remove the 6 bolts.

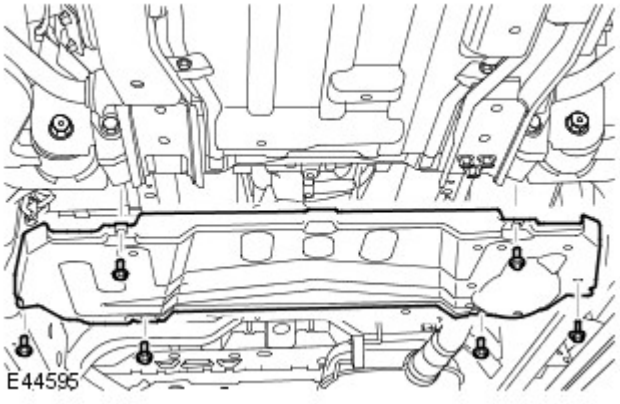

3. If installed, remove the transmission heat shield.

- Remove the 4 bolts.

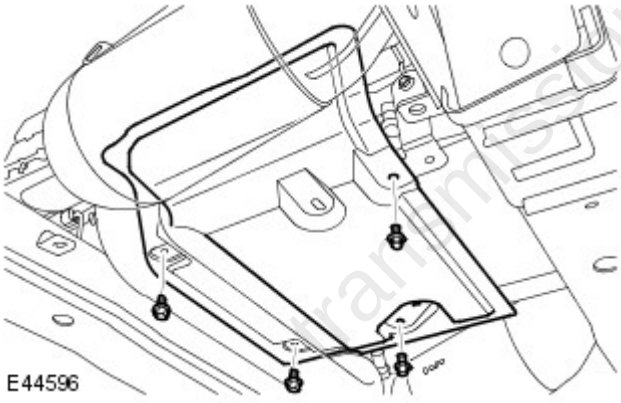

Vehicles with 4.0L engine

4. Remove the transmission support insulator through-bolt.

- Raise the transmission to gain access to the fluid drain plug.

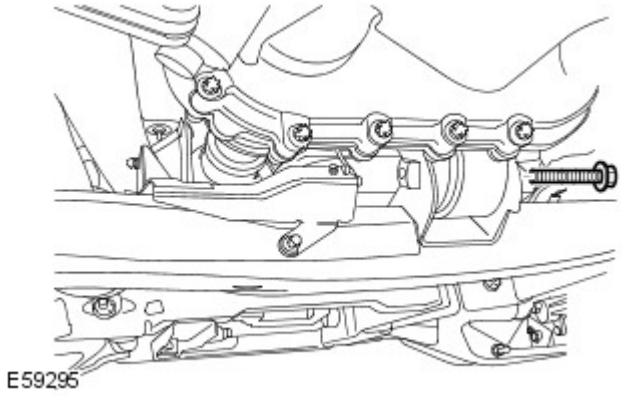

transmissionmanuals.com

All vehicles

5. Clean the area around the transmission fluid drain and filler plugs.
6. Place a container under the transmission.



7. WARNINGS:

Observe due care when draining transmission fluid as the fluid can be very hot.

Observe due care when working near a hot exhaust system.

Remove the transmission fluid filler/level plug.

- Remove and discard the sealing washer.



8. Remove the transmission fluid drain plug.
   - Remove and discard the sealing washer.
   - Allow the fluid to drain.

9. Install the transmission fluid drain plug and tighten to 9 Nm (7 lb.ft).
   - Install a new sealing washer.

Vehicles with 4.0L engine

10. Install the transmission support insulator through-bolt and tighten to 175 Nm (129 lb.ft).
    - Lower the transmission.

All vehicles

11. Add 3.5 to 4 litres of the correct transmission fluid, or until a small thread of fluid runs from the filler/level hole.
12. Check and top-up the transmission fluid level.
    For additional information, refer to: Transmission Fluid Level Check (307-01A Automatic Transmission/Transaxle - TDV6 2.7L Diesel, General Procedures).

transmissionmanuals.com

Published: 11-May-2011

Automatic Transmission / Transaxle - V6 4.0L Petrol - Transmission Fluid Level Check

General Procedures

- WARNINGS:

Observe due care when draining transmission fluid as the fluid can be very hot.

Observe due care when working near a hot exhaust system.

CAUTION: The gearbox fluid level must only be checked when the temperature of the fluid is between 30 degrees and 50 degrees. The fluid level obtained will be incorrect if the reading is outside this temperature range.

1. The following steps must be observed before starting the transmission fluid level check and top-up.

- The vehicle must be on a horizontal ramp.
- The parking brake must be applied.
- The wheels must be chocked.

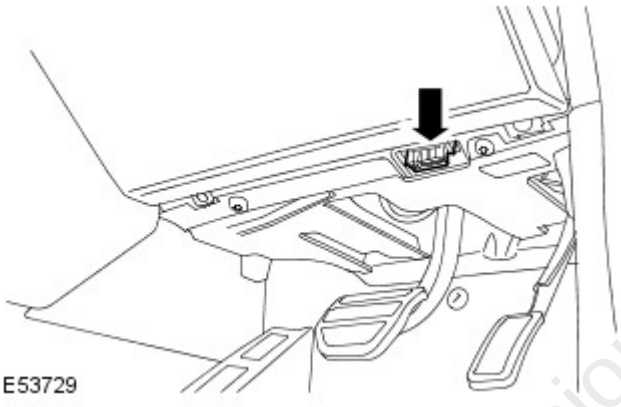

2. CAUTION: Make sure the transmission fluid temperature is below 30 degrees before starting the fluid level check.

Using the approved Land Rover diagnostic equipment, monitor the transmission fluid temperature.

3. Start the engine. Move the selector lever from 'P' through all gear positions, pausing in each gear position for 2-3 seconds and return to the 'P' position.

4. WARNING: Do not work on or under a vehicle supported only by a jack. Always support the vehicle on safety stands.

Raise and support the vehicle.

5. Remove the transmission undershield.

- Remove the 6 bolts.

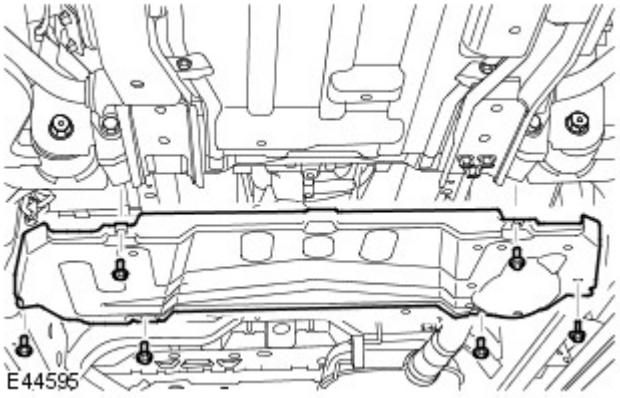

transmissionmanuals.com

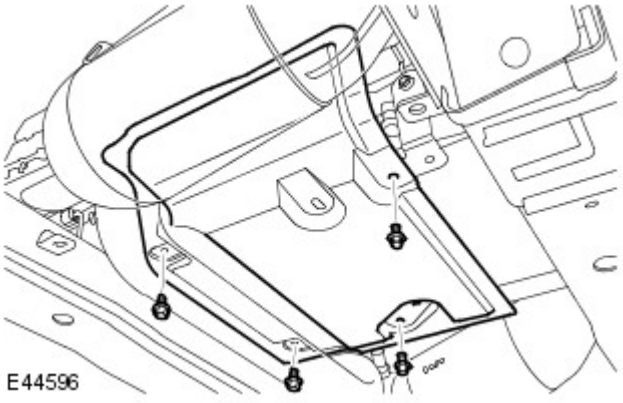

6. If installed, remove the transmission heat shield.

- Remove the 4 bolts.

7. Place a container under the transmission.



8. WARNINGS:

Observe due care when draining transmission fluid as the fluid can be very hot.

Observe due care when working near a hot exhaust system.

CAUTION: The gearbox fluid level must only be checked when the temperature of the fluid is between 30 degrees and 50 degrees. The fluid level obtained will be incorrect if the reading is outside this temperature range.

Remove the transmission fluid filler/level plug.

- Clean the area around the filler/level plug.
- Remove and discard the sealing washer.

9. If no fluid loss is apparent when the filler/level plug is removed, with the engine at idle, continue to fill the transmission until a small thread of oil runs from oil filler/level hole.

10. Install the transmission fluid filler/level plug and tighten to 35 Nm (26 lb.ft).

- Install a new sealing washer.
- Remove the container.

11. If installed, install the transmission heat shield.

- Tighten the bolts to 10 Nm (7 lb.ft).

12. Install the transmission undershield.

- Tighten the bolts to 10 Nm (7 lb.ft).

13. Disconnect the approved Land Rover diagnostic equipment from the vehicle.

transmissionmanuals.com

Published: 11-May-2011

Automatic Transmission / Transaxle - V6 4.0L Petrol - Selector Shaft Seal

In-vehicle Repair

Special Tool(s)	
307-509-1  E50766	ZF Automatic transmission selector shaft seal remover 307-509-1 (LRT-44-033/1)
307-509-2  E50767	ZF Automatic transmission selector shaft seal remover 307-509-2 (LRT-44-033/2)
307-509-3  E50768	ZF Automatic transmission selector shaft seal installer 307-509-3 (LRT-44-033/3)

Removal

1. WARNING: Do not work on or under a vehicle supported only by a jack. Always support the vehicle on safety stands.

Raise and support the vehicle.

2. LH selector shaft seal only: Remove the exhaust system. For additional information, refer to: Exhaust System (309-00C Exhaust System - V6 4.0L Petrol, Removal and Installation).

3. Remove the transmission heat shield.

- Remove the 4 bolts.

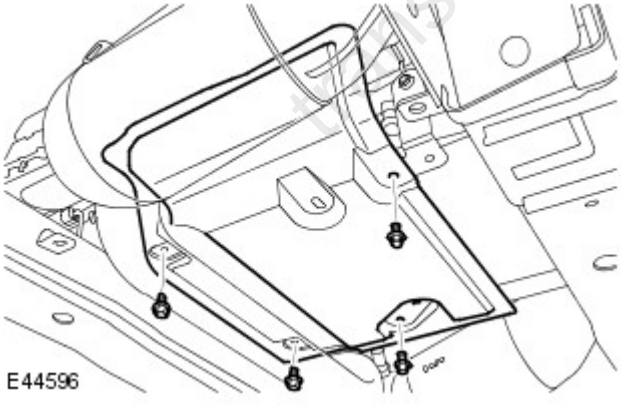

transmissionmanuals.com

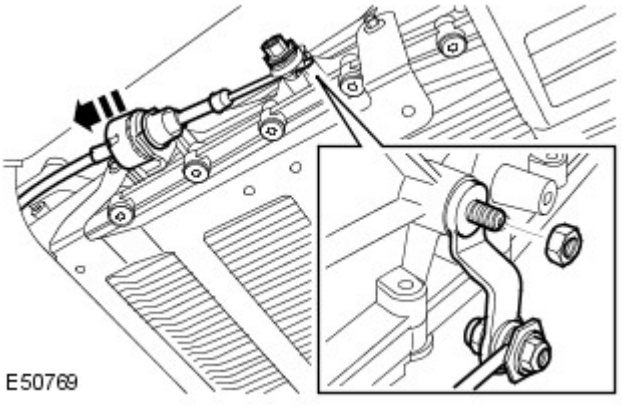

4. Release the selector cable and lever.

- Remove the nut.
- Compress the latch and release the cable.

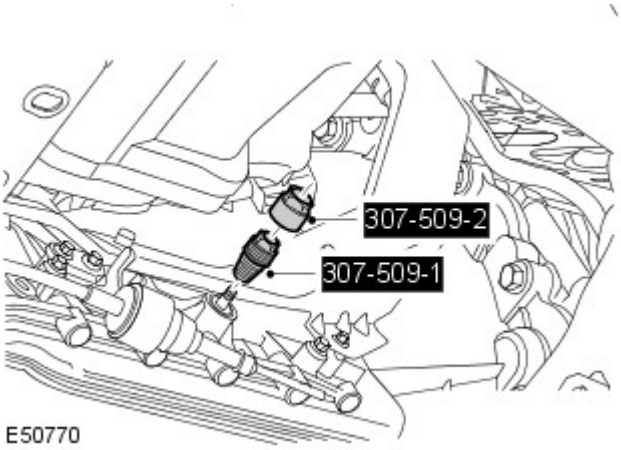

5. CAUTION: Before the disconnection or removal of any components, ensure the area around joint faces and connections are clean. Plug any open connections to prevent contamination.

Remove the selector shaft seal.

- Install 307-509-1 to the seal.
- Install 307-509-2 to 307-509-1 and extract the seal.

Installation

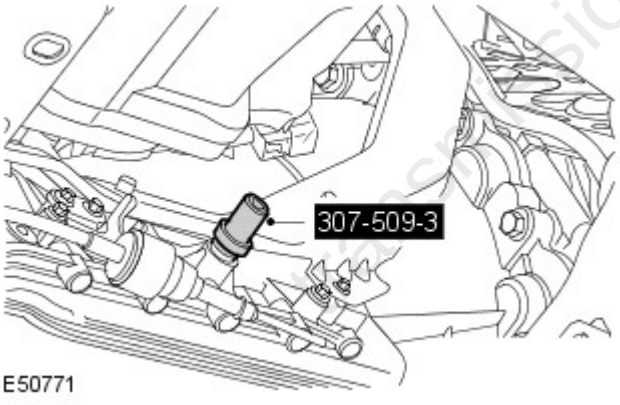

1. Using 307-509-3, install the selector shaft seal.

- Clean the components.

2. Install the selector cable and bracket.

- Secure with the clip.
- Tighten the nut to 12 Nm (9 lb.ft).

3. Install the transmission heat shield.

- Install the bolts.

4. LH selector shaft seal only: Install the exhaust system.
For additional information, refer to: Exhaust System (309-00C Exhaust System - V6 4.0L Petrol, Removal and Installation).

transmissionmanuals.com

Published: 11-May-2011

Automatic Transmission / Transaxle - V6 4.0L Petrol - Transmission Control Module (TCM)

In-vehicle Repair

Special Tool(s)	
	ZF Automatic transmission valve block seals remover 307-492 (LRT-44-005)

Removal

- NOTE: The transmission control module (TCM) is part of the main control valve body and cannot be serviced separately.

1. WARNING: Do not work on or under a vehicle supported only by a jack. Always support the vehicle on safety stands.

Raise and support the vehicle.

2. Remove the fluid pan.
For additional information, refer to: Fluid Pan, Gasket and Filter (307-01B Automatic Transmission/Transaxle - V6 4.0L Petrol, In-vehicle Repair).

3. Disconnect the electrical connector.

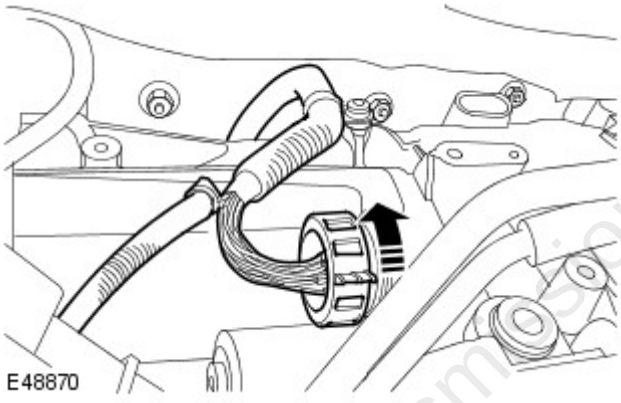

4. Remove and discard the electrical connector sleeve.

- Release the retainer.

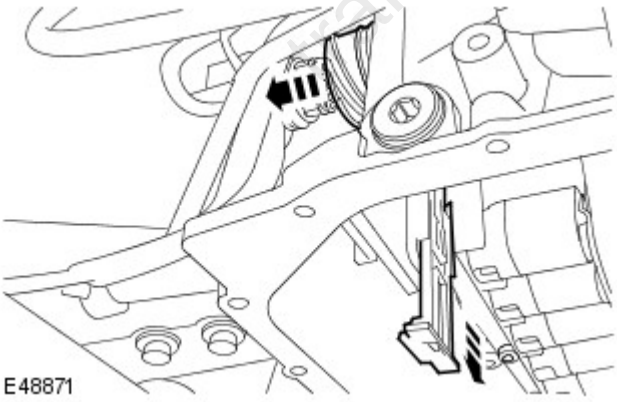

transmissionmanuals.com

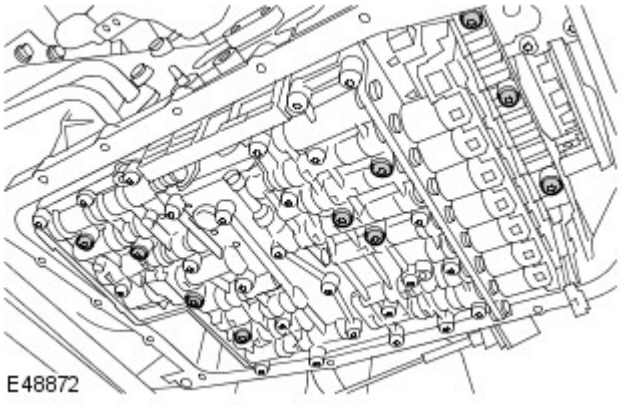

5. Remove the valve body.

- Position a container to collect spillage.
- Remove the 10 Torx screws.

6. Using the special tool, remove the 4 seals.

7. Remove the seal block.

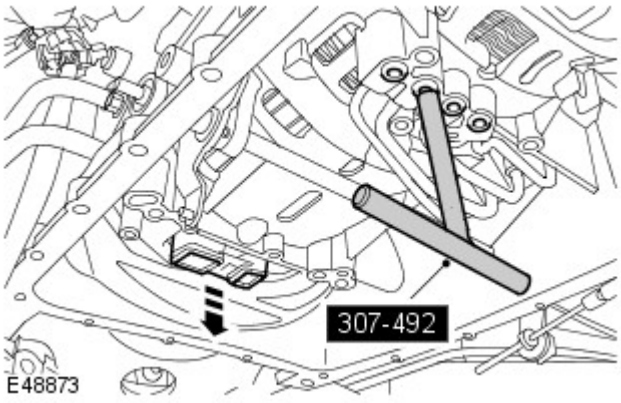

Installation

1. CAUTIONS:

Make sure that when fully fitted, all seals protrude by the same amount.

Engage the selector lever with the groove in the piston rod.

Install the valve body.

- Clean the component mating faces.
- Install new seals.
- Install a new seal block.
- Tighten the Torx screws to 8 Nm (6 lb.ft).

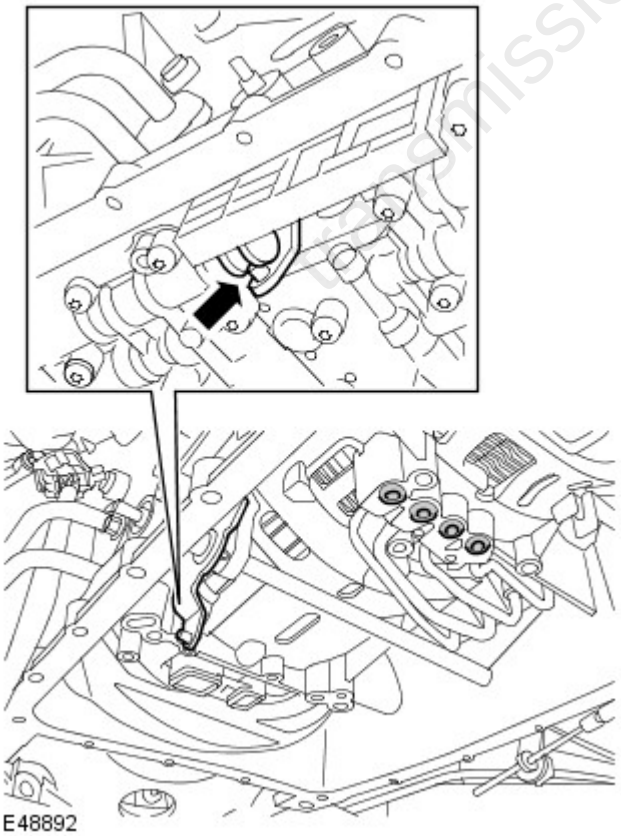

2. Install a new electrical connector sleeve.

transmissionmanuals.com

- Secure with retainer.

3. Connect the electrical connector.
4. Install the fluid pan.
   For additional information, refer to: Fluid Pan, Gasket and Filter (307-01B Automatic Transmission/Transaxle - V6 4.0L Petrol, In-vehicle Repair).
5. Calibrate a new main control valve body using T4.

transmissionmanuals.com

Published: 11-May-2011

Automatic Transmission / Transaxle - V6 4.0L Petrol - Output Shaft Seal

In-vehicle Repair

Special Tool(s)	
303-903  E50940	Oil seal remover 303-903 (LRT-12-092)
307-520 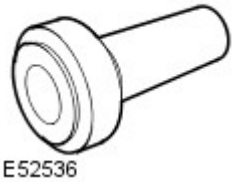 E52536	Oil seal installer 307-520

Removal

1. WARNING: Do not work on or under a vehicle supported only by a jack. Always support the vehicle on safety stands.

   Raise and support the vehicle.

2. Remove the transfer case.
   For additional information, refer to: Transfer Case - V6 4.0L Petrol (308-07B Transfer Case, Removal).

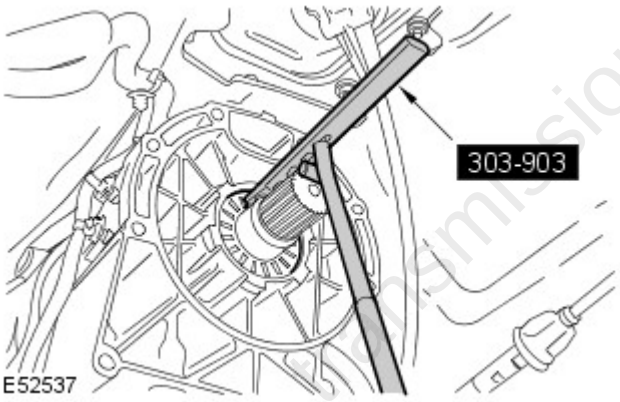

3. CAUTION: Care must be taken to avoid damage to the seal register and running surface.

   Remove the transmission output shaft oil seal.

   - Use the special tool.

Installation

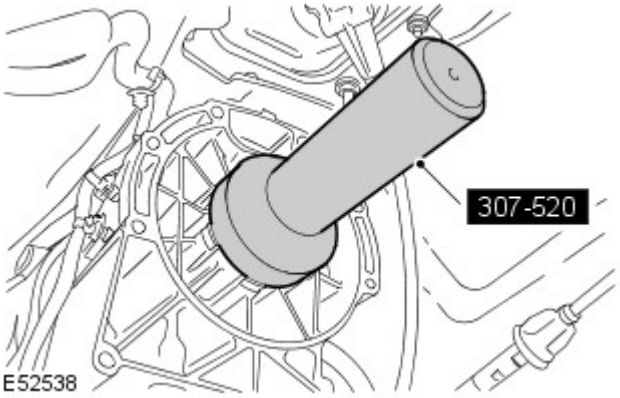

1. CAUTION: Oil seals must be fitted dry.

   Install a new transmission output shaft oil seal.

   - Clean the seal register.
   - Use the special tool.

2. Install the transfer case.
   For additional information, refer to: Transfer Case - V6 4.0L

Petrol (308-07B Transfer Case, Removal).

3. Check and top-up the transmission fluid level.
   For additional information, refer to: Transmission Fluid Level Check (307-01A Automatic Transmission/Transaxle - TDV6 2.7L Diesel, General Procedures).

transmissionmanuals.com

Published: 11-May-2011

Automatic Transmission / Transaxle - V6 4.0L Petrol - Fluid Pan, Gasket and Filter

In-vehicle Repair

Removal

1. Disconnect the battery ground cable.
   For additional information, refer to: Specifications (414-00 Battery and Charging System - General Information, Specifications).
2. Remove the engine cover.
   For additional information, refer to: Engine Cover - V6 4.0L Petrol (501-05 Interior Trim and Ornamentation, Removal and Installation).
3. WARNING: Do not work on or under a vehicle supported only by a jack. Always support the vehicle on safety stands.

   Raise and support the vehicle.
4. Remove the exhaust system.
   For additional information, refer to: Exhaust System (309-00C Exhaust System - V6 4.0L Petrol, Removal and Installation).
5. Remove the transmission support insulator.
   - Remove the 4 bolts.

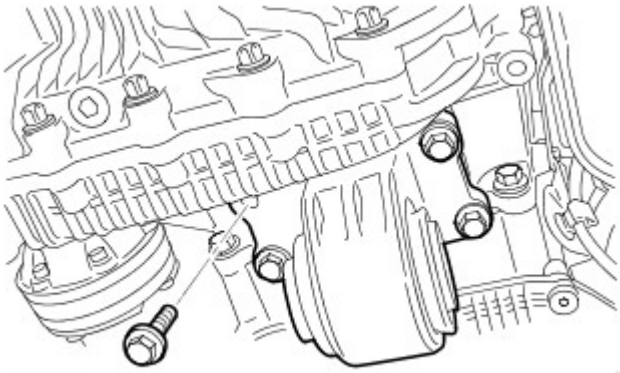
E54739

6. Remove the transmission heat shield.
   - Remove the 4 bolts.

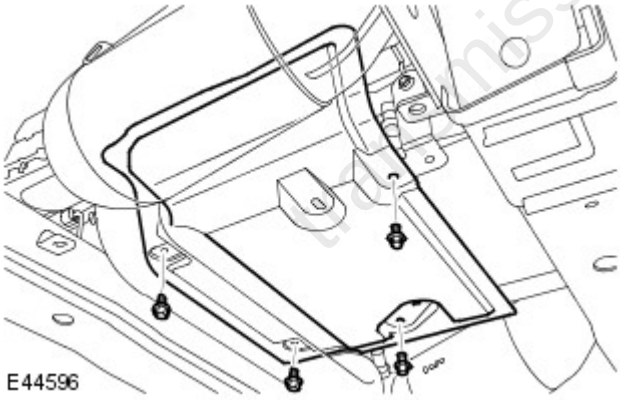
E44596

7. Release the selector cable from its abutment bracket.
8. Remove the transmission heat shield bracket.
   - Remove the 4 bolts.
9. Drain the transmission.
   For additional information, refer to: Transmission Fluid Drain and Refill (307-01A Automatic Transmission/Transaxle - TDV6 2.7L Diesel, General Procedures).

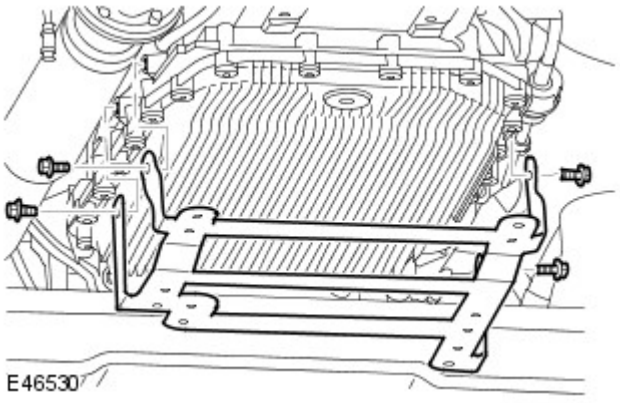
E46530

transmissionmanuals.com

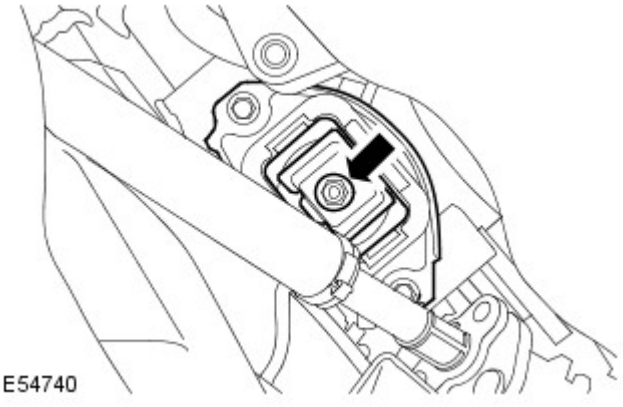

10. CAUTION: Protect the engine during this operation.

Raise the RH side of the engine by approximately 15 mm.

- Remove the nut.
- Use a transmission jack.

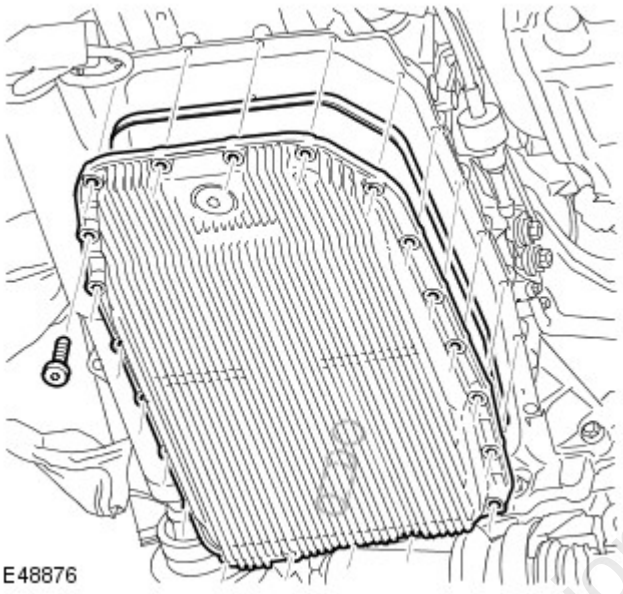

11. Remove the fluid pan.

- Position a container to collect the fluid spillage.
- Remove the 21 Torx screws.
- Remove and if necessary, discard the seal.
- Discard the O-ring seal.

transmissionmanuals.com

Installation

1. Install the fluid pan.

- Clean the components.
- Install the seal.
- Install a new O-ring seal.
- Tighten the Torx screws to 8 Nm (6 lb.ft).

2. Lower the RH side of the engine.

- Remove the engine support.
- Tighten the nut to 90 Nm (66 lb.ft).

3. Install the transmission heat shield bracket.

- Tighten the 4 bolts to 10 Nm (7 lb.ft).
- Install the selector cable to its abutment bracket.

4. Install the selector cable to its abutment bracket.

5. Install the transmission heat shield.

- Tighten the bolts to 10 Nm (7 lb.ft).

6. Install the transmission support insulator.

- Clean the component mating faces.
- Tighten the bolts to 60 Nm (44 lb.ft).

7. Install the exhaust system.
   For additional information, refer to: Exhaust System (309-00C Exhaust System - V6 4.0L Petrol, Removal and Installation).
8. Install the engine cover.
   For additional information, refer to: Engine Cover - V6 4.0L Petrol (501-05 Interior Trim and Ornamentation, Removal and Installation).
9. Connect the battery ground cable.
   For additional information, refer to: Specifications (414-00 Battery and Charging System - General Information, Specifications).
10. Refill the transmision with fluid.
    For additional information, refer to: Transmission Fluid Drain and Refill (307-01A Automatic Transmission/Transaxle - TDV6 2.7L Diesel, General Procedures).

transmissionmanuals.com

Published: 11-May-2011

Automatic Transmission / Transaxle - V6 4.0L Petrol - Main Control Valve Body

In-vehicle Repair

Special Tool(s)	
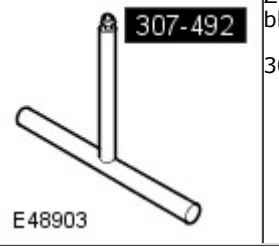	ZF Automatic transmission valve block seals remover 307-492 (LRT-44-005)

Removal

- NOTE: The transmission control module (TCM) is part of the main control valve body and cannot be serviced separately.

1. WARNING: Do not work on or under a vehicle supported only by a jack. Always support the vehicle on safety stands.

Raise and support the vehicle.

2. Remove the fluid pan.
For additional information, refer to: Fluid Pan, Gasket and Filter (307-01B Automatic Transmission/Transaxle - V6 4.0L Petrol, In-vehicle Repair).

3. Disconnect the electrical connector.

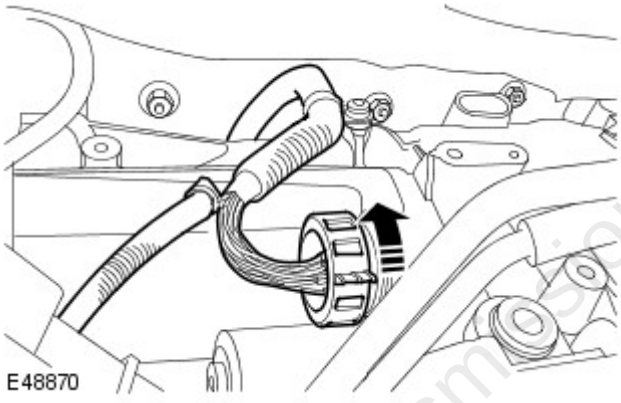

4. Remove and discard the electrical connector sleeve.

- Release the retainer.

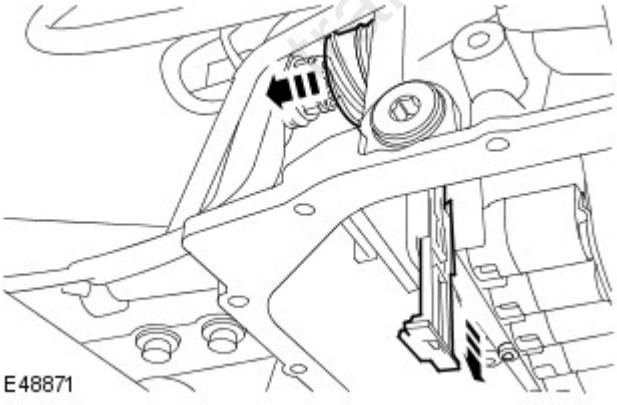

transmissionmanuals.com

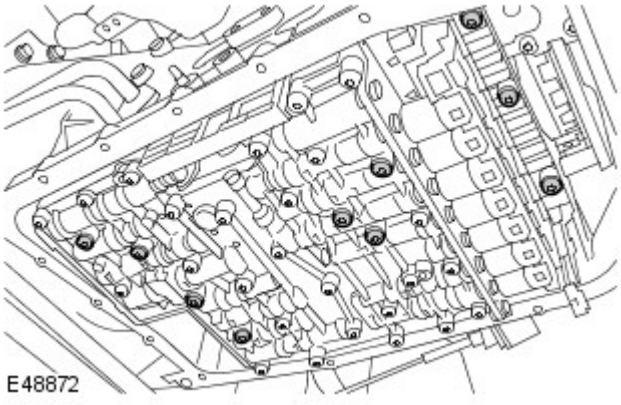

5. Remove the valve body.

- Position a container to collect spillage.
- Remove the 10 Torx screws.

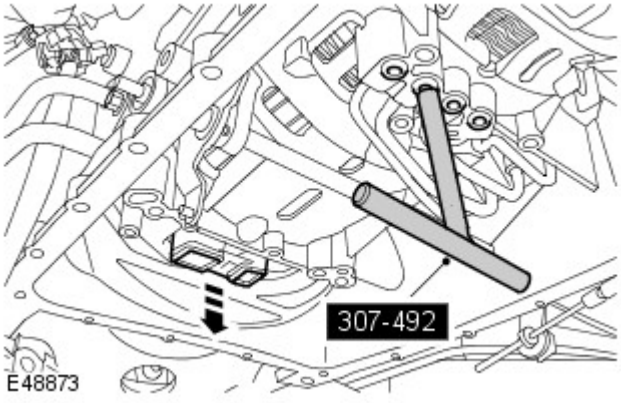

6. Using the special tool, remove the 4 seals.

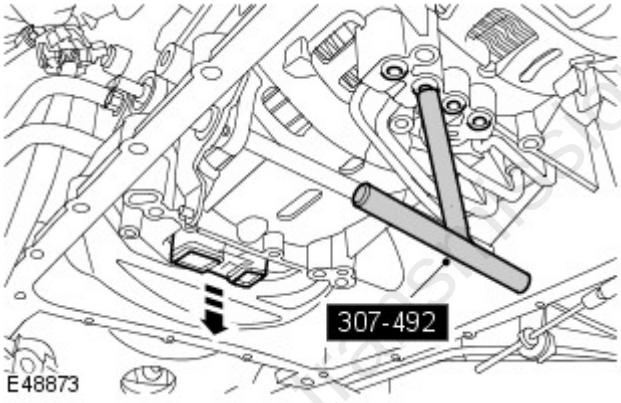

7. Remove the seal block.

Installation

fordtransitmanuals.com

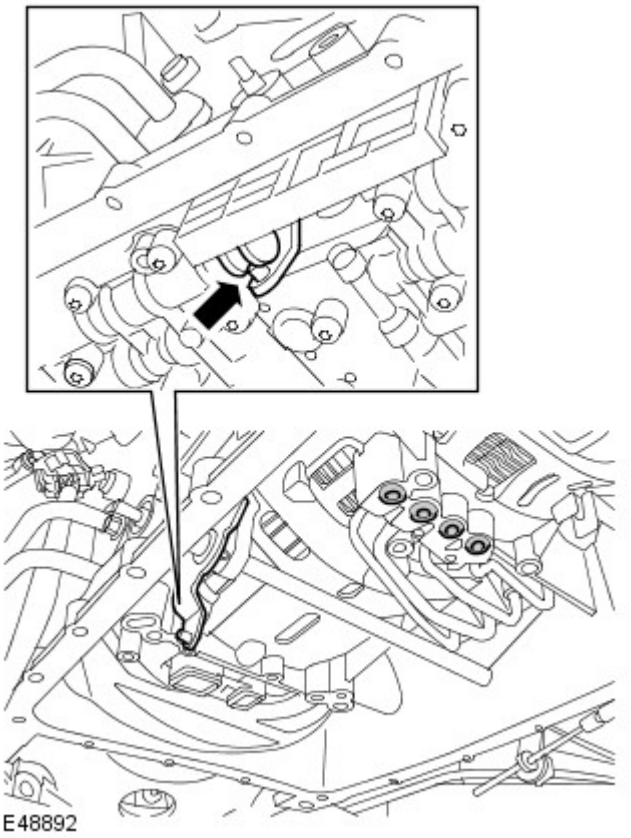

1. CAUTIONS:

⚠ Make sure that when fully fitted, all seals protrude by the same amount.

⚠ Engage the selector lever with the groove in the piston rod.

Install the valve body.

- Clean the component mating faces.
- Install new seals.
- Install a new seal block.
- Tighten the Torx screws to 8 Nm (6 lb.ft).

2. Install a new electrical connector sleeve.

- Secure with retainer.

3. Connect the electrical connector.

4. Install the fluid pan.
For additional information, refer to: Fluid Pan, Gasket and Filter (307-01B Automatic Transmission/Transaxle - V6 4.0L Petrol, In-vehicle Repair).

5. Calibrate a new main control valve body using T4.

transmissionmanuals.com

Published: 11-May-2011

Automatic Transmission / Transaxle - V6 4.0L Petrol - Transmission Support Insulator

In-vehicle Repair

Removal

1. WARNING: Do not work on or under a vehicle supported only by a jack. Always support the vehicle on safety stands.

Raise and support the vehicle.

2. Remove the transmission crossmember.
For additional information, refer to: Transmission Support Crossmember - V8 5.0L Petrol (502-02 Full Frame and Body Mounting, Removal and Installation).

3. NOTE: 4.4L illustration shown, 4.0L and 2.7L Diesel are similar.

Remove the transmission support insulator.

- Remove the 4 bolts.

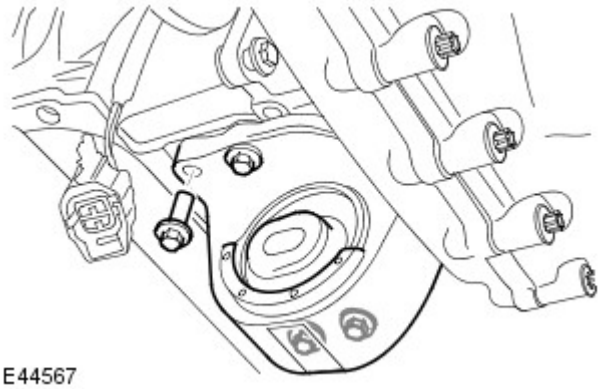

E44567

Installation

1. To install, reverse the removal procedure.

- Clean the component mating faces.
- Tighten the bolts to 60 Nm (44 lb.ft).

transmissionmanuals.com

Published: 11-May-2011

Automatic Transmission / Transaxle - V6 4.0L Petrol - Transmission

Removal and Installation

Special Tool(s)	
 E46737	Torque converter seal installer 308-246
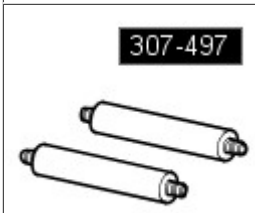 E46738	Torque converter support handles 307-497 (LRT-44-010)

Removal

1. WARNING: Do not work on or under a vehicle supported only by a jack. Always support the vehicle on safety stands.

Raise and support the vehicle.

2. Remove the transfer case.
For additional information, refer to: Transfer Case - V6 4.0L Petrol (308-07B Transfer Case, Removal).

3. Remove the transmission heat shield.

- Remove the 4 bolts.

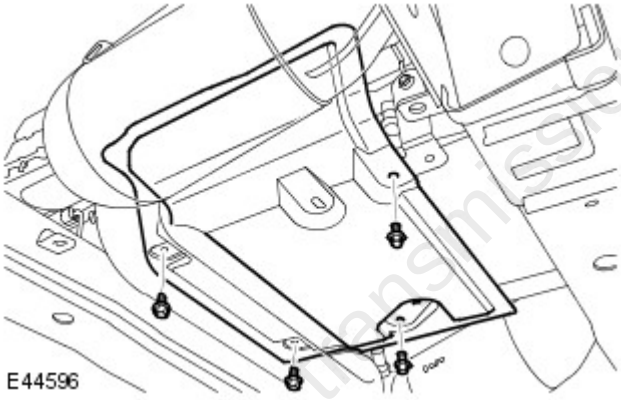
E44596

4. Release the selector cable.

- Using an additional wrench, restrain the clamping bush and loosen the locknut.
- Compress the latch and release the cable.

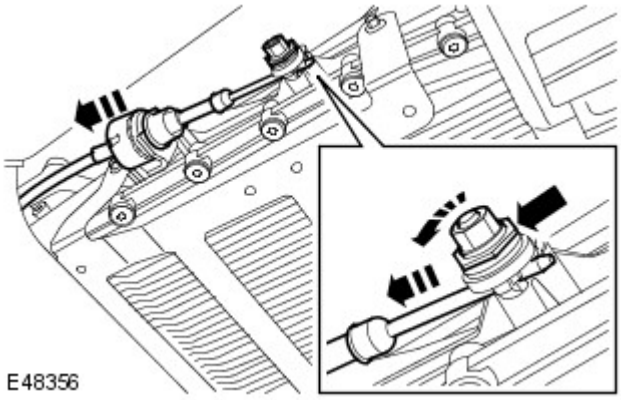
E48356

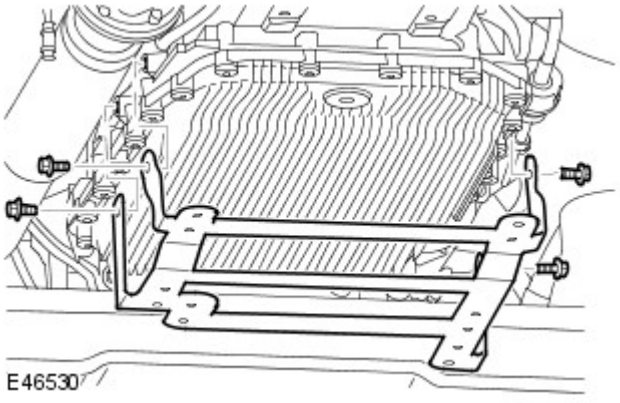

5. Remove the transmission heat shield bracket.

- Remove the 4 bolts.

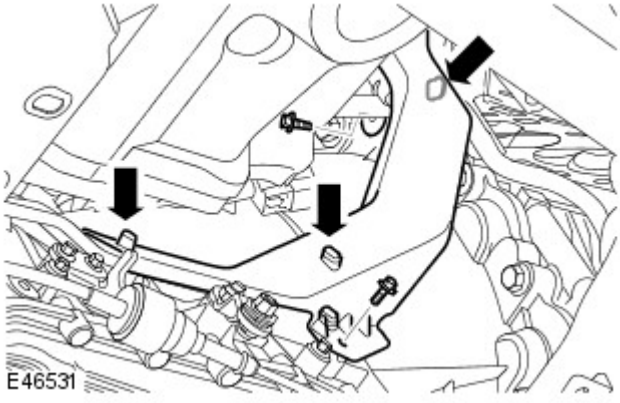

6. Remove the fuel pipe heat shield.

- Remove the 2 bolts.
- Release the fuel pipes from the 3 clips.

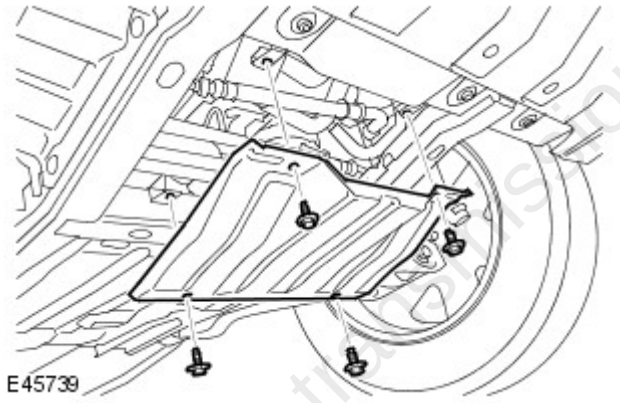

7. Remove the radiator access panel.

- Remove the 4 bolts.

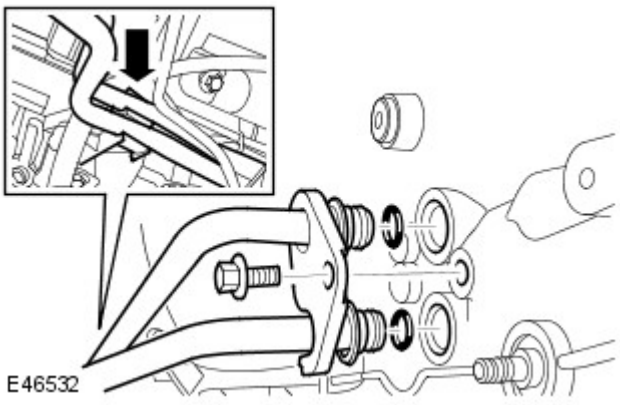

8. CAUTION: Always plug any open connections to prevent contamination.

Release the transmission fluid lines.

- Remove the bolt.
- Release the clip.
- Remove and discard both O-ring seals.

tradebitsonmanuals.com

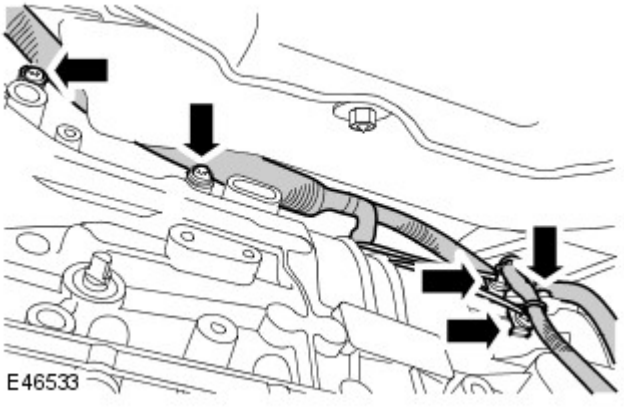

9. Release the wiring harness from the LH side of the transmission.

- Remove the 3 Torx screws.
- Release the 2 clips.

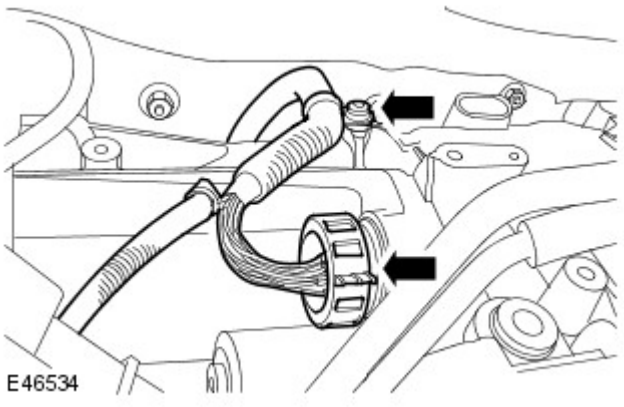

10. Release the wiring harness from the RH side of the transmission.

- Remove the Torx screw.
- Disconnect the electrical connector.



11. Release the transmission breather line clip.

- Remove the bolt.

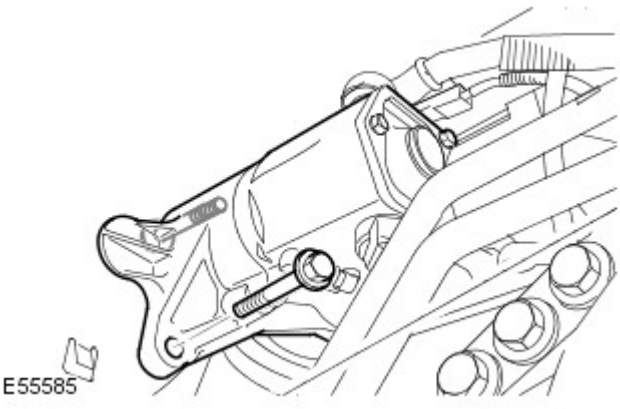

12. Release the starter motor.

- Remove the 2 bolts.
- Tie the starter motor aside.

transmissionmanuals.com

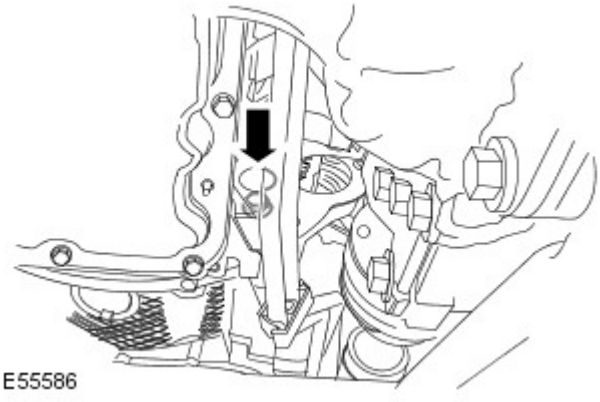

13. Release the flexplate.

- Rotate the crankshaft to access the bolts.
- Remove the 4 bolts.

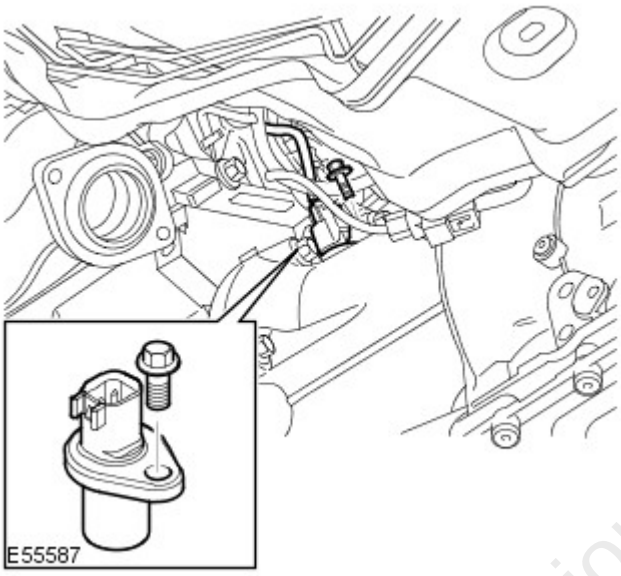

14. Remove the crankshaft position (CKP) sensor.

- Disconnect the electrical connector.
- Remove the bolt.

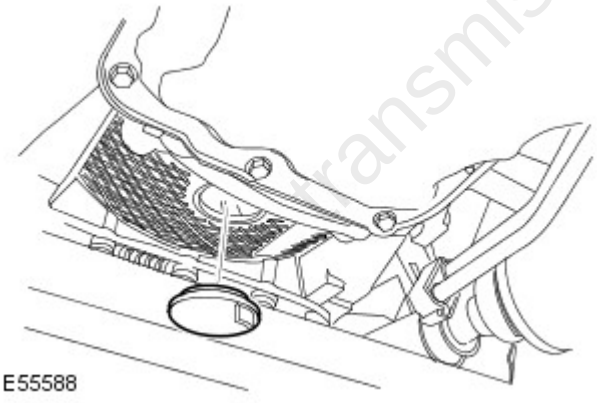

15. Remove the access hole plug.

Transmissionmanuals.com

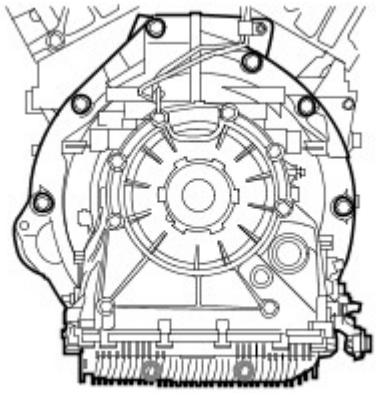

E55589

16. WARNINGS:

Support the engine. The engine will fall forward when the transmission is removed.

Secure the transmission to the transmission jack.

Make sure the torque converter remains with the transmission.

With assistance, remove the transmission.

- Using a transmission jack, support the transmission.
- Remove the 8 bolts.

17. Install the torque converter retainer.

18. NOTE: Do not disassemble further if the component is removed for access only.

Remove the transmission from the transmission jack.

19. Remove the torque converter retainer.

20. Using the special tools, remove the torque converter.

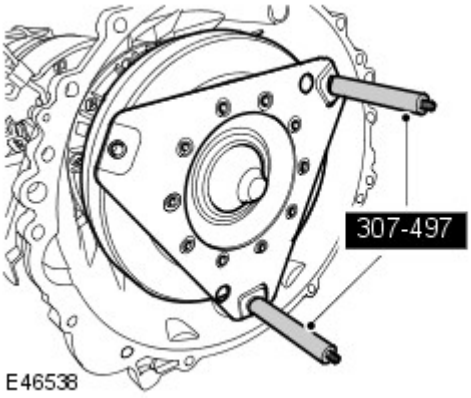

E46538

21. Carefully remove and discard the torque converter fluid seal.

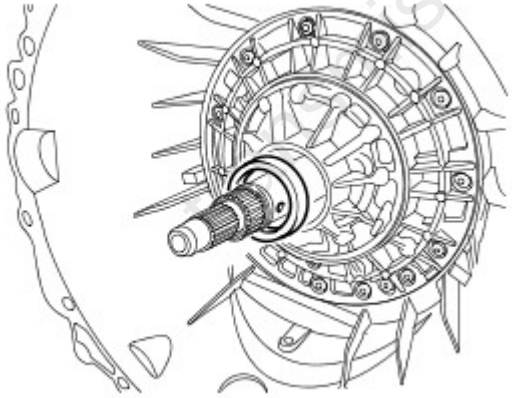

E48465

transmissionmanuals.com

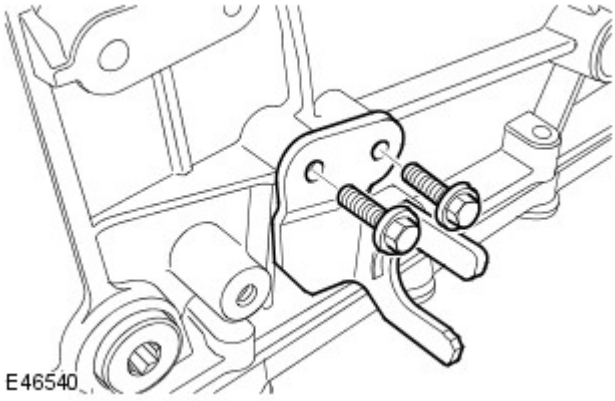

22. Remove the selector cable bracket.

- Remove the 2 bolts.

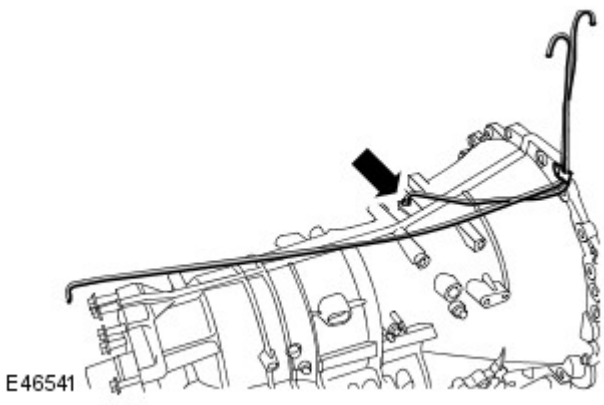

23. CAUTION: Always plug any open connections to prevent contamination.

Remove the transmission breather lines.

- Depress the locking ring.

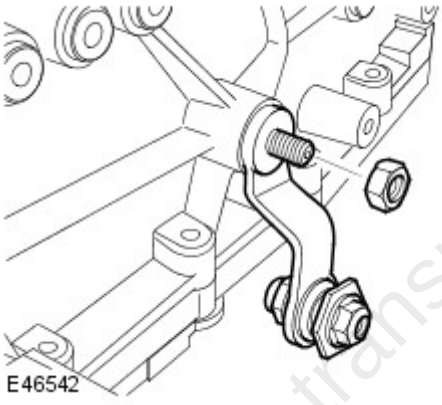

24. Remove the selector lever.

- Remove the nut.

transmissionmanuals.com

Installation

CAUTION: If the automatic transmission fluid is very dirty or it contains metallic particles, then along with a new transmission, install a new automatic transmission fluid cooler and lines.

1. Attach the selector lever.

- Tighten the nut to 12 Nm (9 lb.ft).

2. Attach the transmission breather lines.

- Secure with the clip.

3. Attach the selector cable bracket.

- Tighten the bolts to 10 Nm (7 lb.ft).

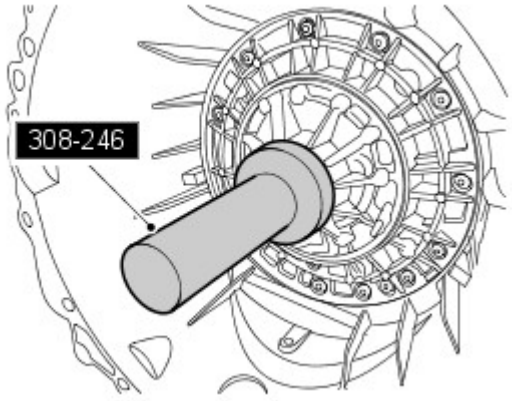

E46739

4. Using the special tool, install a new torque converter oil seal.

- Clean the seal register.

5. CAUTION: Make sure the torque converter is fully located into the oil pump drive.

Install the torque converter.

- Clean the seal contact area.
- Remove the special tools.

6. Install the torque converter retainer.

7. WARNING: Secure the transmission to the transmission jack.

Position the transmission to the transmission jack.

8. Remove the torque converter retainer.

9. CAUTION: Apply grease of the correct specification to the torque converter spigot.

With assistance, install the transmission.

- Clean the component mating faces.
- Tighten the bolts to 45 Nm (33 lb.ft).

10. Attach the flexplate to the torque converter.

- Rotate the crankshaft to access the bolts.
- Tighten the bolts to 45 Nm (33 lb.ft).

11. Attach the transmission breather pipe clip.

- Tighten the bolt to 25 Nm (18 lb.ft).

12. Attach the wiring harness.

- Tighten the Torx screws.
- Connect the electrical connector.

13. Attach the transmission fluid lines.

- Clean the components.
- Install the new O-ring seals.
- Secure with the clip.
- Tighten the bolt to 10 Nm (7 lb.ft).

14. Install the fuel pipe heat shield.

- Tighten the bolts to 10 Nm (7 lb.ft).
- Secure with the clips.

15. Install the transmission heat shield bracket.

16. Attach the selector cable.

17. Install the transfer case.

- Tighten the bolts to 10 Nm (7 lb.ft).

transmissionmanuals.com

For additional information, refer to: Transfer Case - V6 4.0L Petrol (308-07B Transfer Case, Removal).

18. Adjust the selector cable.
For additional information, refer to: Selector Lever Cable Adjustment (307-05B Automatic Transmission/Transaxle External Controls - V6 4.0L Petrol, General Procedures).

19. Check and top-up the transmission fluid level.
For additional information, refer to: Transmission Fluid Level Check (307-01B Automatic Transmission/Transaxle - V6 4.0L Petrol, General Procedures).

20. Install the transmission heat shield.

- Tighten the bolts to 10 Nm (7 lb.ft).

21. NOTE: For NAS vehicles only.

If fitting new or exchange components, carry out long drive cycle.
For additional information, refer to: Powertrain Control Module (PCM) Long Drive Cycle Self-Test (303-14A, General Procedures).

transmissionmanuals.com